CLIO 用 Pre-emphasis and De-emphasis filter の製作

国立天文台 辰巳大輔
2008-12-23

p.2	Pre-emphasis filter	回路図面
p.3		実装図面
p.4		伝達関数
p.5		pole,zero fitting results
p.6		雑音スペクトラム（@出力端子）
p.7		入力換算雑音スペクトラム
p.8	De-emphasis filter	回路図面
p.9		実装図面
p.10		伝達関数
p.11		pole,zero fitting results
p.12		雑音スペクトラム（@出力端子）

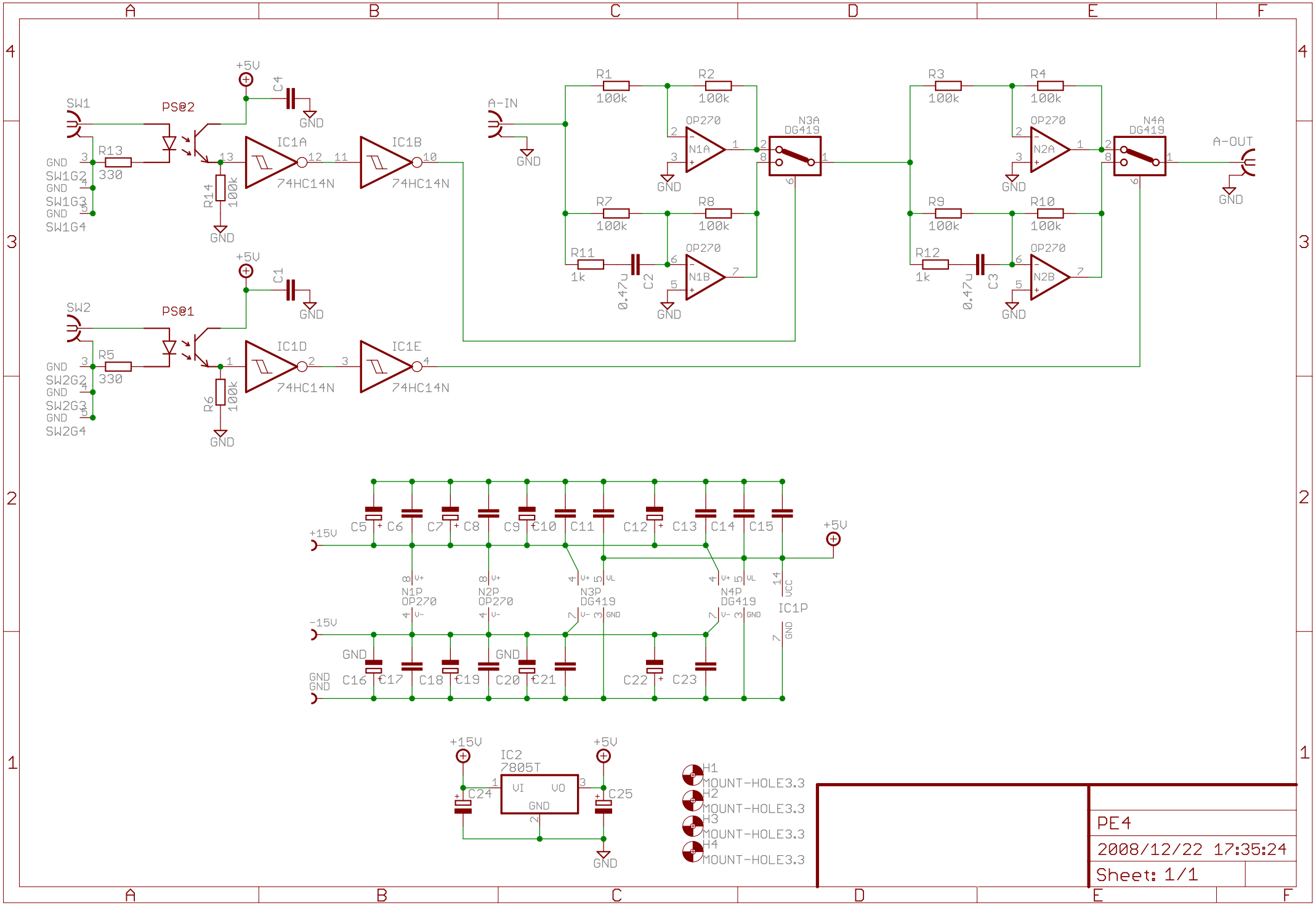

2008/12/24 10:09:17 f=1.08 C:\Documents and Settings\tatsu.WHITEHOLE\My Documents\eagle\tatsu\PE_DE\ver4\PE4.sch (Sheet: 1/1)

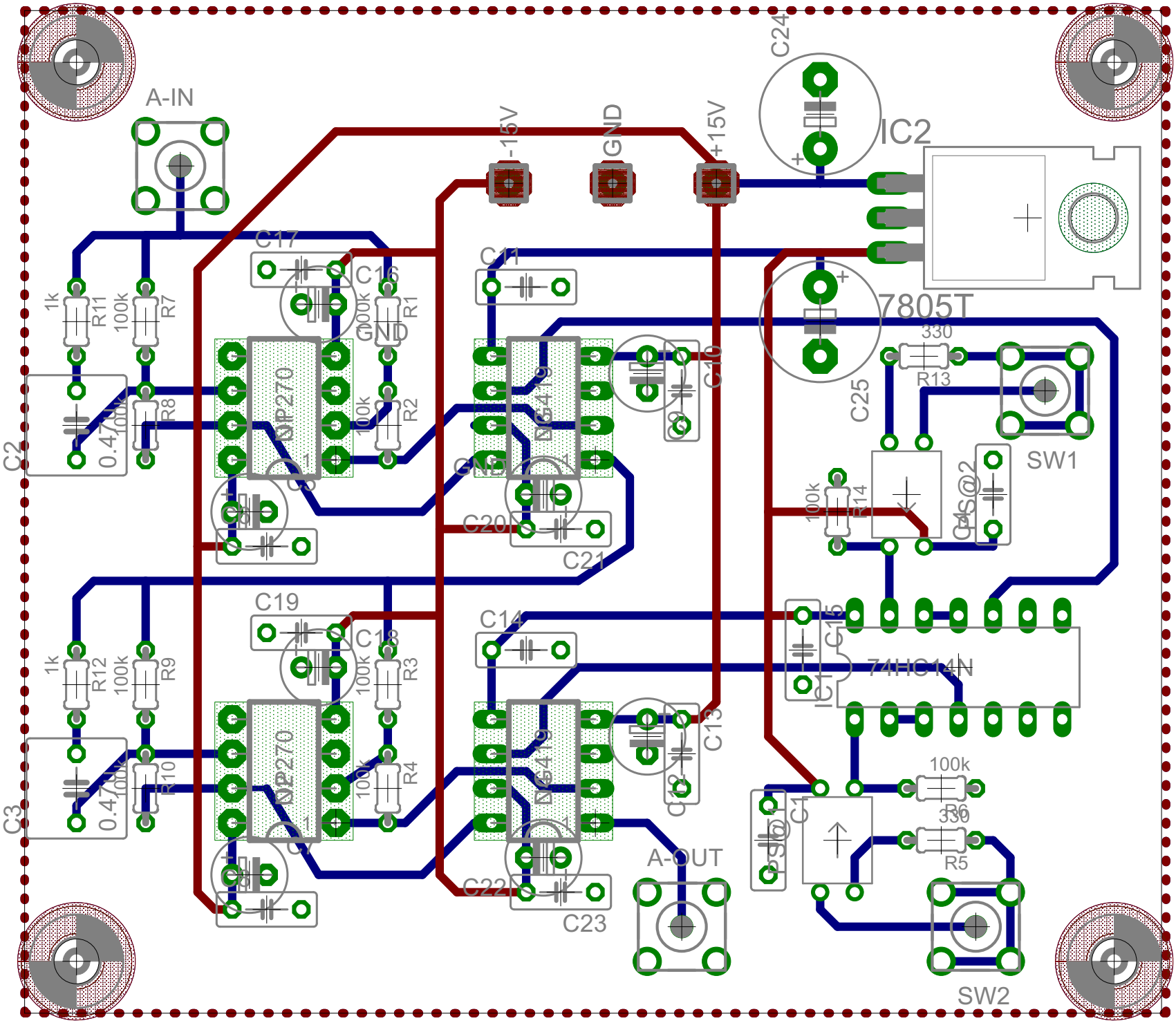

2008/12/24 10:09:04 f=2.61 C:\Documents and Settings\tatsu.WHITEHOLE\My Documents\eagle\tatsu\PE_DE\ver4\PE4.brd

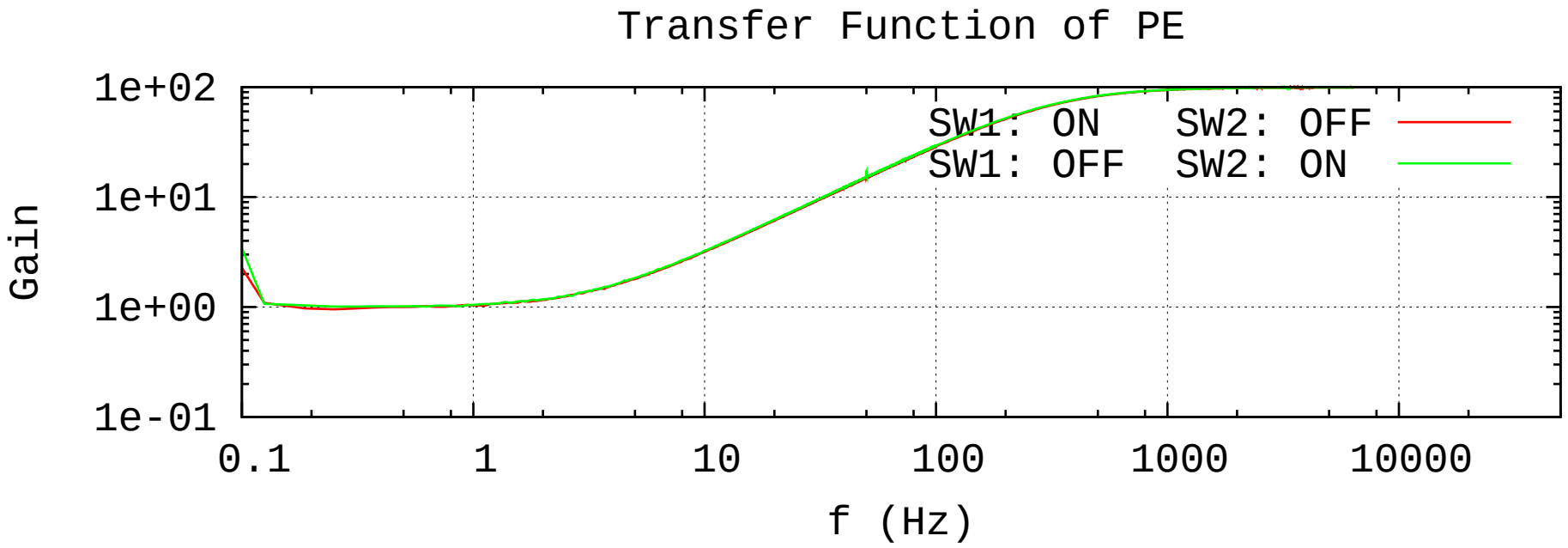
Transfer Function of PE
Gain
1e+02
1e+01
1e+00
1e-01
0.1
1
10
100
1000
10000
f (Hz)
SW1: ON SW2: OFF
SW1: OFF SW2: ON

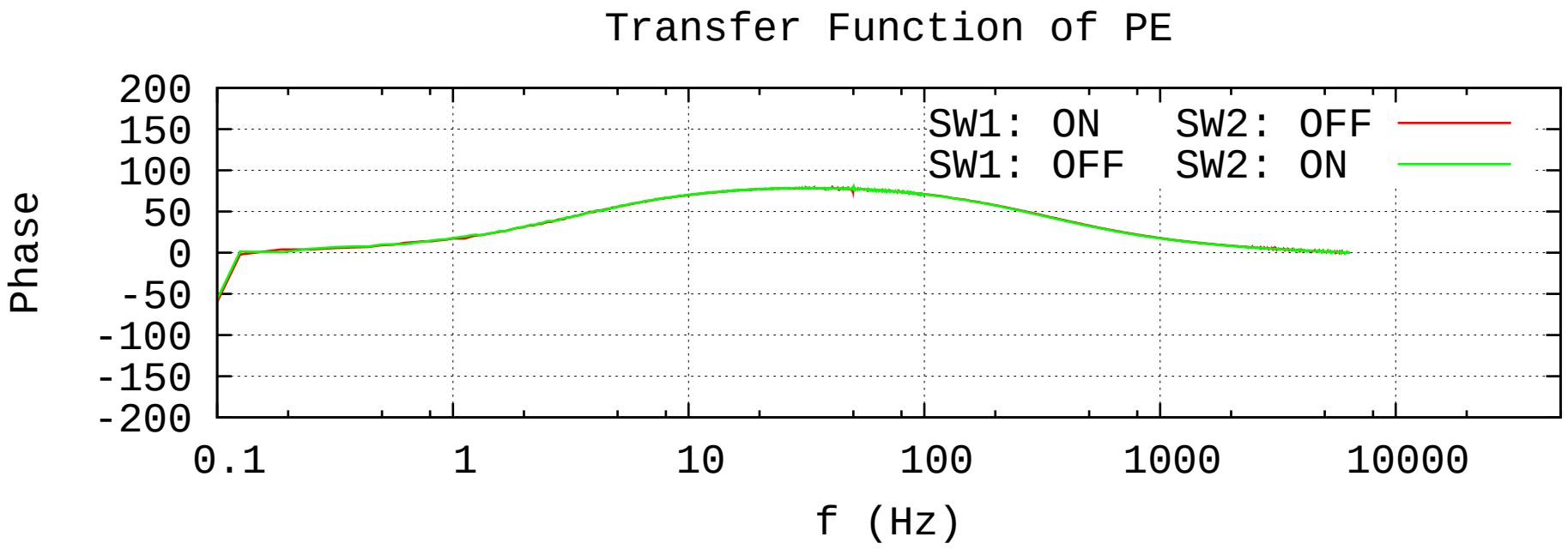
Transfer Function of PE
Phase
200
150
100
50
0
-50
-100
-150
-200
0.1
1
10
100
1000
10000
f (Hz)
SW1: ON SW2: OFF
SW1: OFF SW2: ON

```
[ PE: SW1 ON ]
Best parameter estimates:

pole0:f =  324.5011497640 +- 478.8m (0.148%)
zero0:f =  3.3019972058 +- 52.52m (1.59%)
factor  =  1.0060113978 +- 15.78m (1.57%)

Final chi^2=165.742
```

```
[ PE: SW2 ON ]
Best parameter estimates:

pole0:f =  318.2752504073 +- 528m (0.166%)
zero0:f =  3.2230920423 +- 58.69m (1.82%)
factor  =  1.0022873232 +- 18m (1.8%)

Final chi^2=211.087
```

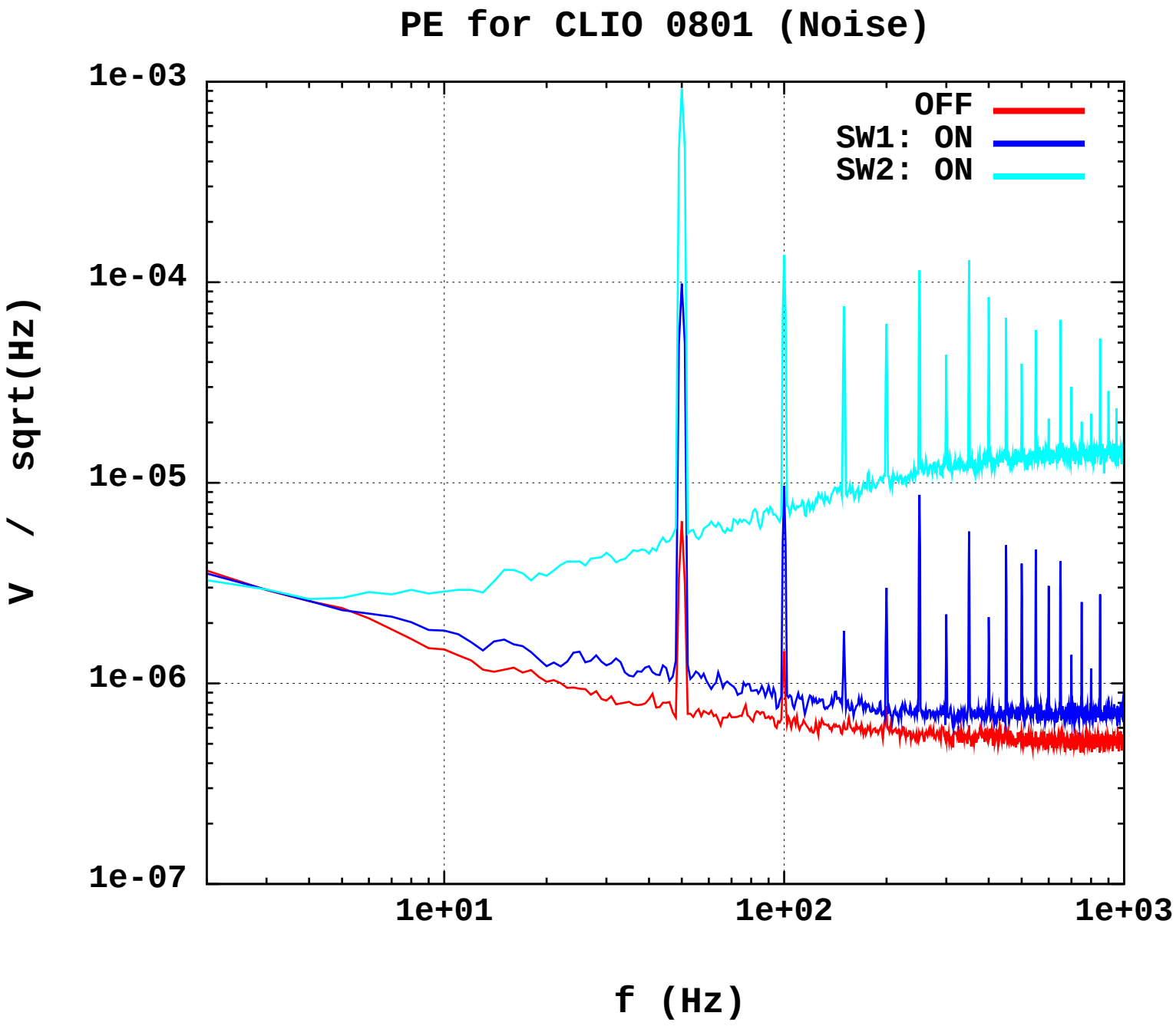
PE for CLIO 0801 (Noise)
OFF
SW1: ON
SW2: ON
1e-03
1e-04
1e-05
1e-06
1e-07
V / sqrt(Hz)
1e+01
1e+02
1e+03
f (Hz)

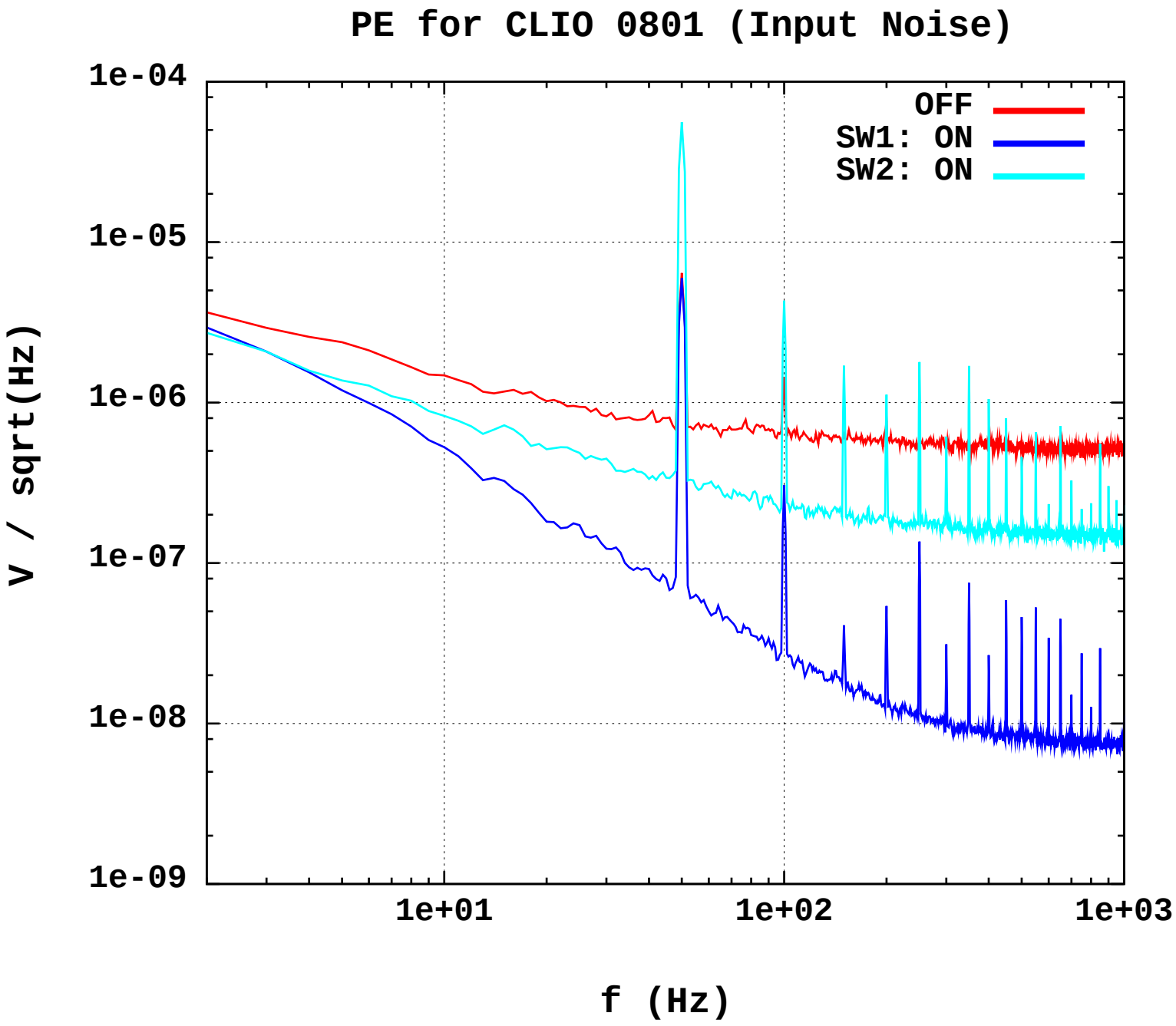
PE for CLIO 0801 (Input Noise)
OFF
SW1: ON
SW2: ON
1e-04
1e-05
1e-06
1e-07
1e-08
1e-09
V / sqrt(Hz)
1e+01
1e+02
1e+03
f (Hz)

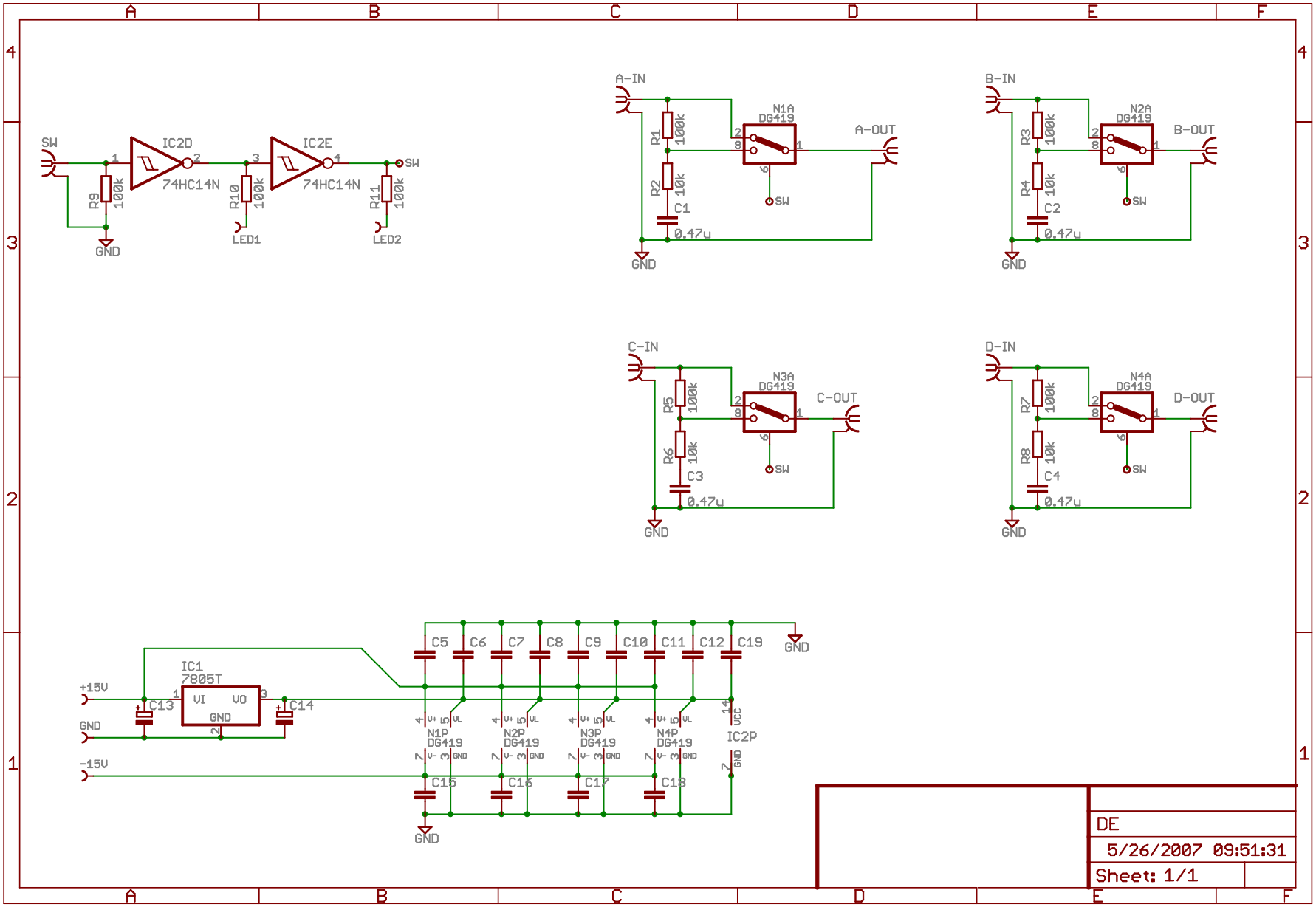
SW
IC2D
74HC14N
IC2E
74HC14N
R9 100k
R10 100k
R11 100k
LED1
LED2
GND
A-IN
A-OUT
N1A DG419
R1 100k
R2 10k
C1 0.47u
B-IN
B-OUT
N2A DG419
R3 100k
R4 10k
C2 0.47u
C-IN
C-OUT
N3A DG419
R5 100k
R6 10k
C3 0.47u
D-IN
D-OUT
N4A DG419
R7 100k
R8 10k
C4 0.47u
+15V
-15V
IC1 7805T
VI VO GND
C13
C14
C5 C6 C7 C8 C9 C10 C11 C12 C19
N1P DG419
N2P DG419
N3P DG419
N4P DG419
IC2P
C15 C16 C17 C18
DE
5/26/2007 09:51:31
Sheet: 1/1

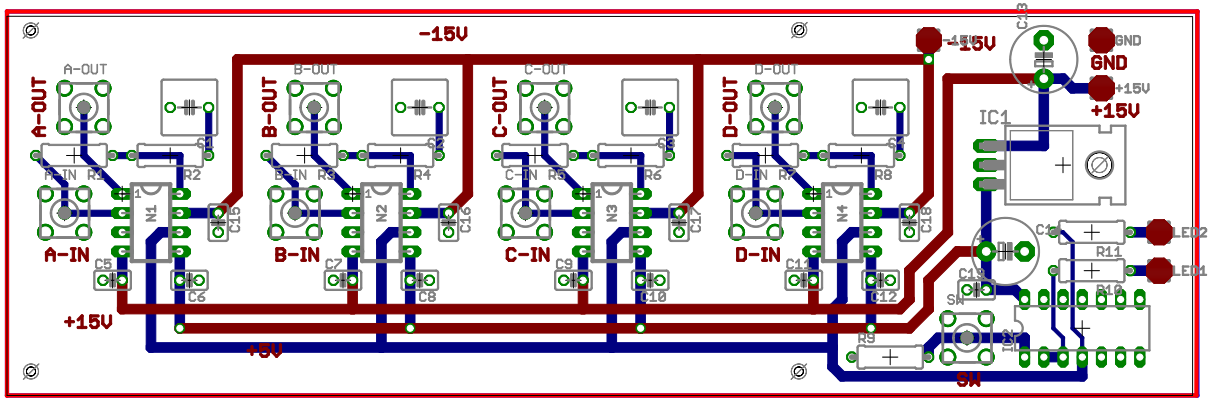
-15V
+15V
GND
A-OUT
B-OUT
C-OUT
D-OUT
A-IN
B-IN
C-IN
D-IN
IC1
LED2
LED1
SW
+15V
+15V
5V

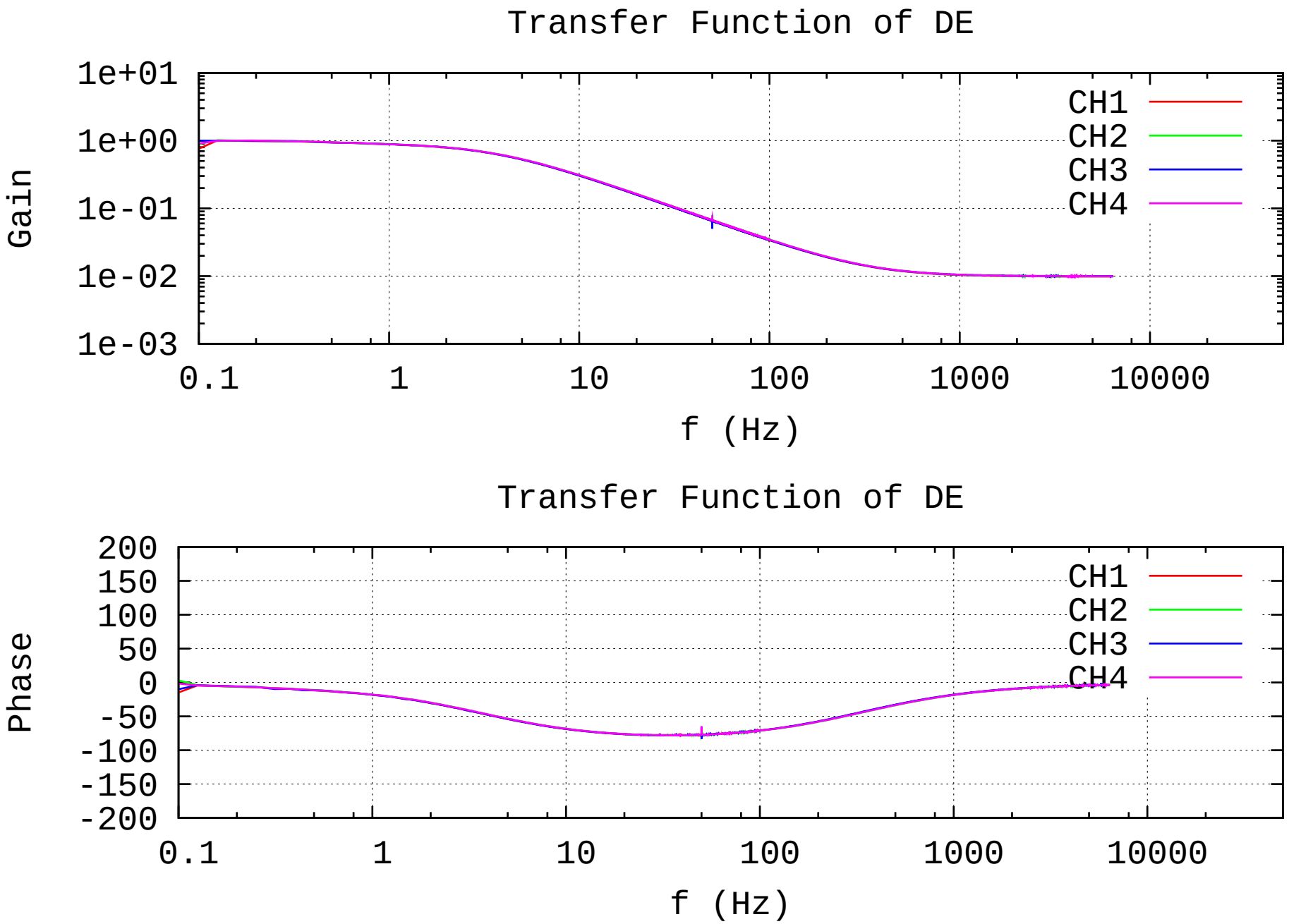
Transfer Function of DE
Gain
1e+01
1e+00
1e-01
1e-02
1e-03
0.1
1
10
100
1000
10000
f (Hz)
CH1
CH2
CH3
CH4
Transfer Function of DE
Phase
200
150
100
50
0
-50
-100
-150
-200
0.1
1
10
100
1000
10000
f (Hz)
CH1
CH2
CH3
CH4

```
[ DE: CH1 ]
Best parameter estimates:

pole0:f =  3.5710399958 +- 636.2u (0.0178%)
zero0:f =  325.1764325553 +- 756.8m (0.233%)
factor  =  906.6070590686m +- 106.3u (0.0117%)

Final chi^2=0.00858448
```

```
[ DE: CH2 ]
Best parameter estimates:

pole0:f =  3.6447427910 +- 574u (0.0157%)
zero0:f =  329.3250972427 +- 678.9m (0.206%)
factor  =  906.8987149189m +- 93.86u (0.0103%)

Final chi^2=0.00682767
```

```
[ DE: CH3 ]
Best parameter estimates:

pole0:f =  3.5611121827 +- 393.9u (0.0111%)
zero0:f =  321.4029941523 +- 459.5m (0.143%)
factor =  907.4727813272m +- 66.06u (0.00728%)

Final chi^2=0.00330775
```

```
[ DE: CH4 ]
Best parameter estimates:

pole0:f =  3.6473945715 +- 1.103m (0.0302%)
zero0:f =  328.9405218758 +- 1.301 (0.395%)
factor  =  906.4698424947m +- 180.1u (0.0199%)

Final chi^2=0.0251459
```

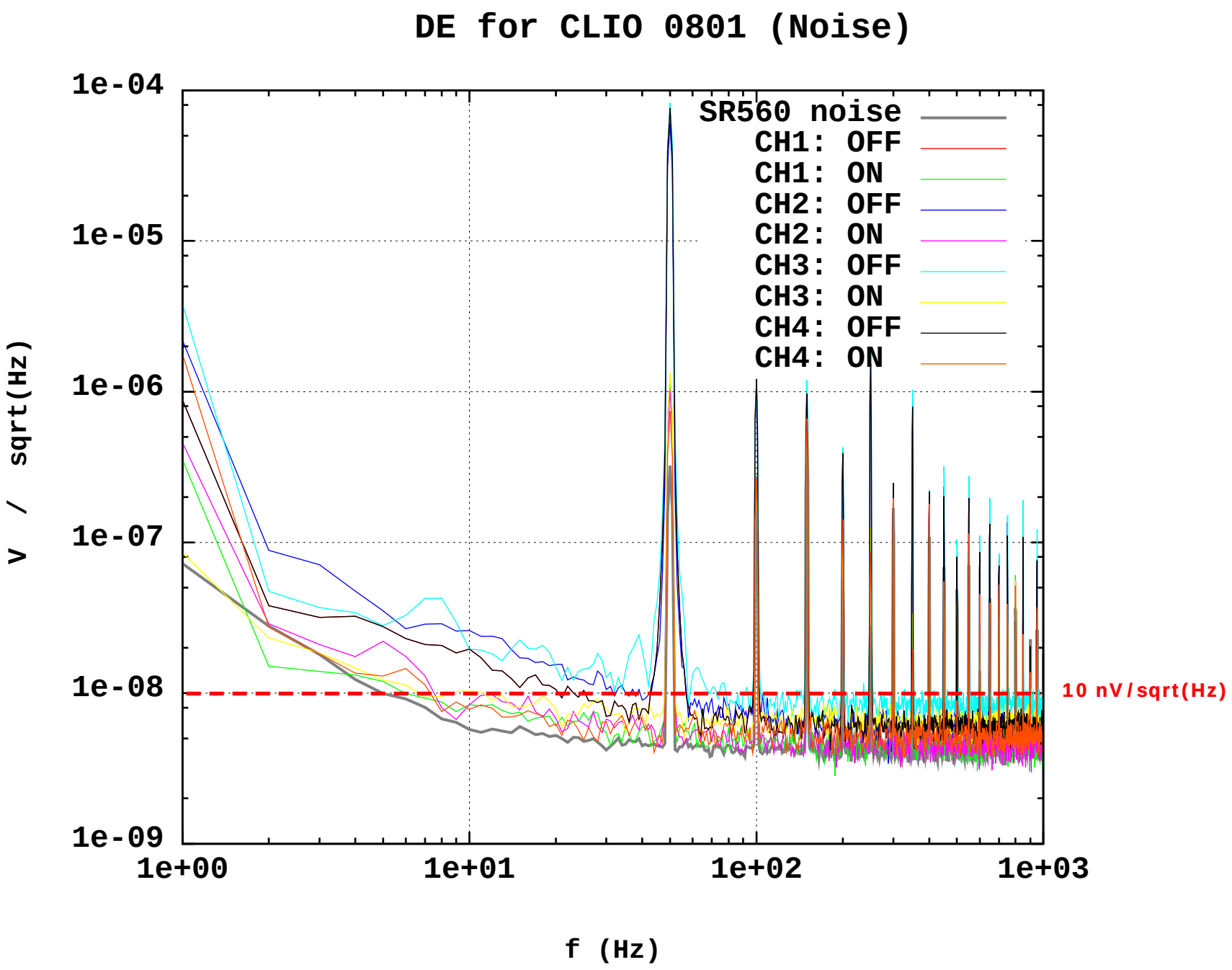
DE for CLIO 0801 (Noise)
SR560 noise
CH1: OFF
CH1: ON
CH2: OFF
CH2: ON
CH3: OFF
CH3: ON
CH4: OFF
CH4: ON
10 nV/sqrt(Hz)
V / sqrt(Hz)
f (Hz)
1e-04
1e-05
1e-06
1e-07
1e-08
1e-09
1e+00
1e+01
1e+02
1e+03