3rd order Butterworth, 10KHz, notch at 65536Hz

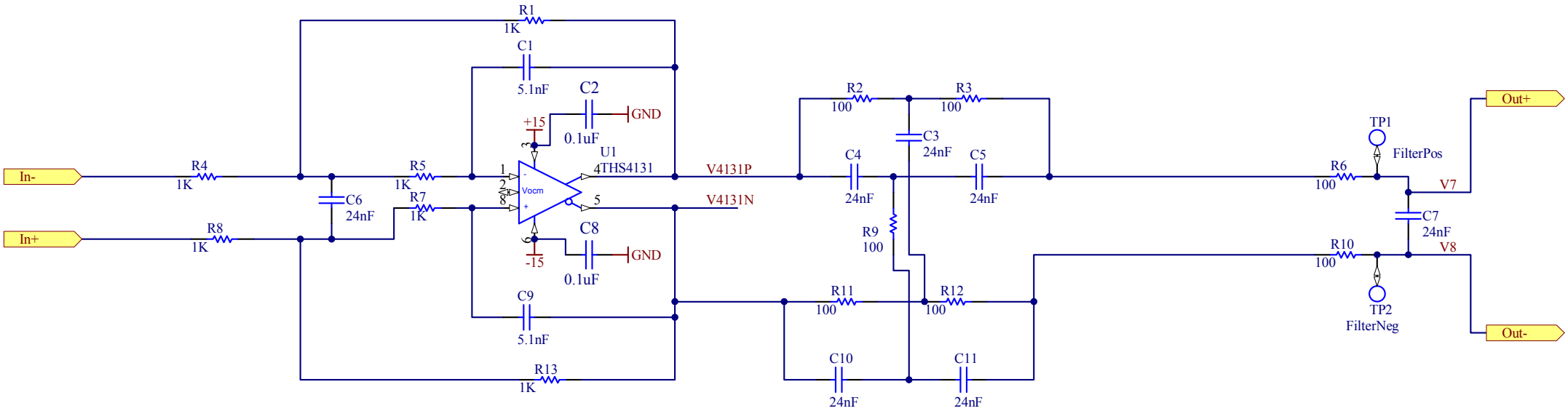

Title **AdL AA and AI Filter**			*LIGO Project* *California Institute of Technology* *Massachusetts Institute of Technology*	LIGO
Size: B	DCC Number: D070081	SCH / PCB Revision: 01	Engineer: J. Heefner	Date: 7/2/2007 Time: 9:26:29 AM
File: C:\Documents and Settings\jay\Desktop\AA_AI_Filter\AA_AI_Filter.SchDoc				Sheet 2 of 2

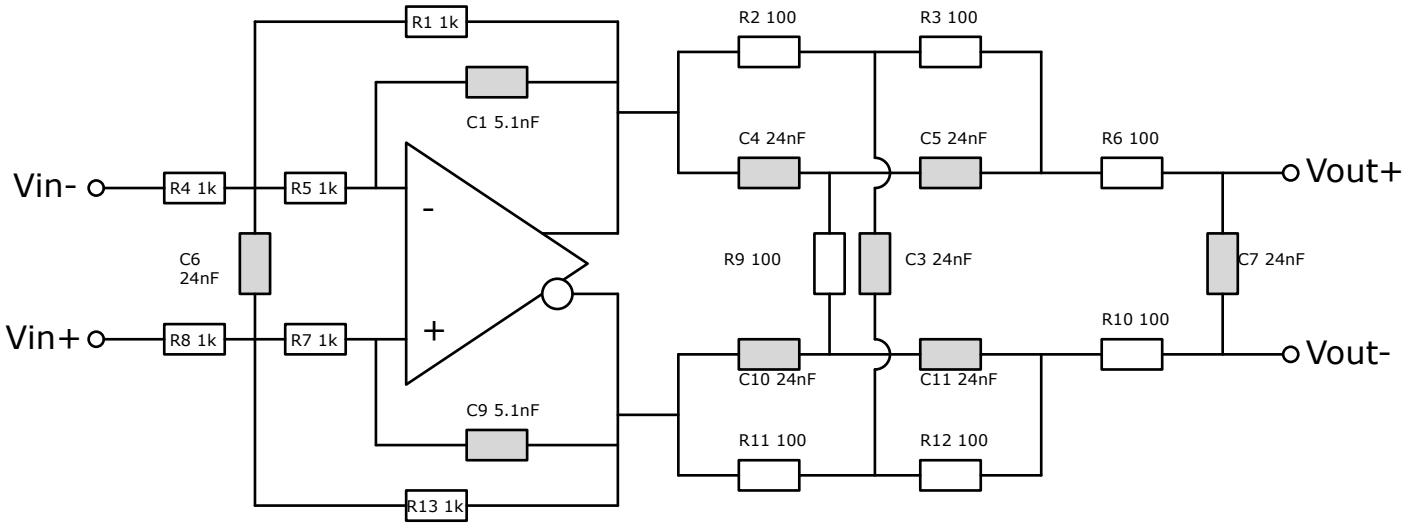

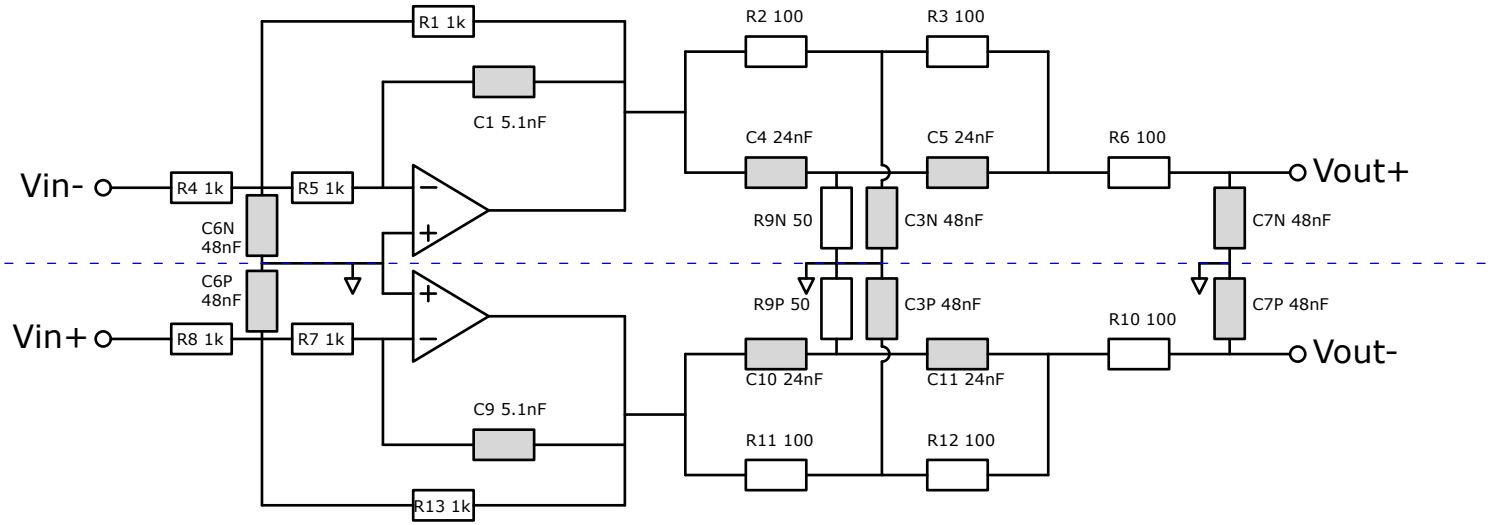

TF = ([Vout+] - [Vout-]) / ([Vin+] - [Vin-]) = - [Vout+] / [Vin-]

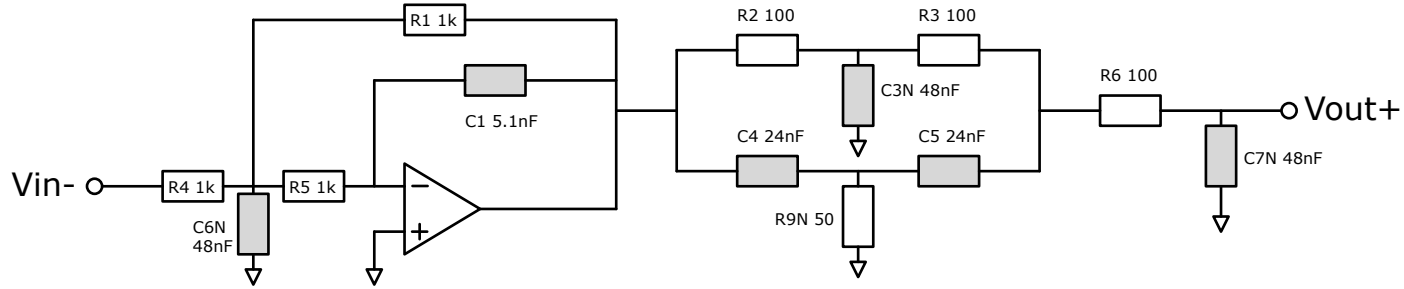

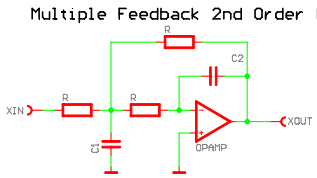

TF = -1/(C1 C2 R^2 s^2 + 3 C2 R s + 1)
w0^2 = 1/(C1 C2 R^2)
Q = sqrt(C1/C2)/3

G=-1

pole:
f0=10.17kHz
Q=1.023

G=1

zero:
f0=66.314kHz
Q=Infinity

pole: (single x3)
f=7.8kHz
f=50kHz
f=373kHz

Total Performance of the whole circuit

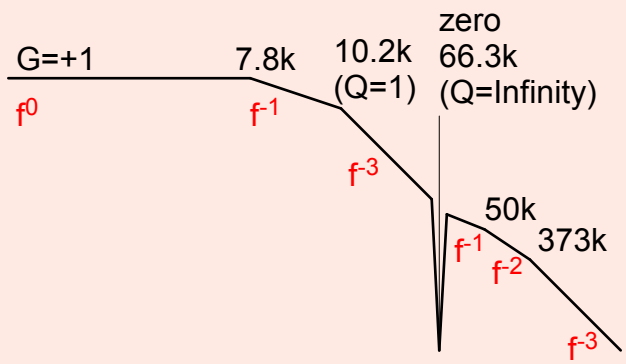

c.f.
Ideal 3rd order butter worth
=>
f0=1 & f0=1 (single)
Q=1

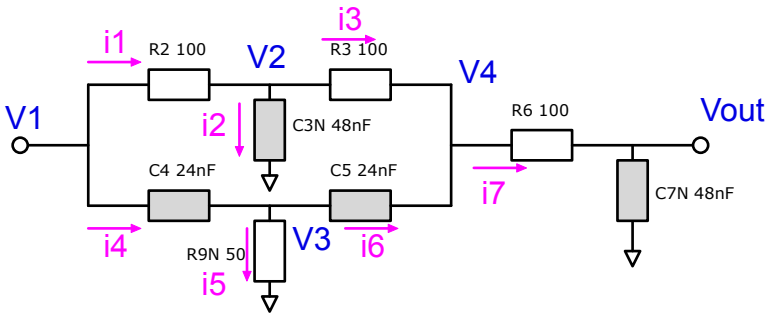

11 unknown params:
V2,V3,V4,Vout, i1,i2,i3,i4,i5,i6,i7

V1 - V2	=	i1 Z_{R2}
V2	=	i2 Z_{C3N}
V2 - V4	=	i3 Z_{R3}
i1	=	i2 + i3
V1 - V3	=	i4 Z_{C4}
V3	=	i5 Z_{R9N}
V3 - V4	=	i6 Z_{C5}
i4	=	i5 + i6
i7	=	i3 + i6
V4 - Vout	=	i7 Z_{R6}
Vout	=	i7 Z_{C7N}

Solve →

Zero:
f = 1/(2 pi R c) = 66.314kHz
(R=100Ω, c=24nF)

Pole:
three single poles
f=7.8kHz, f=50kHz, f=373kHz