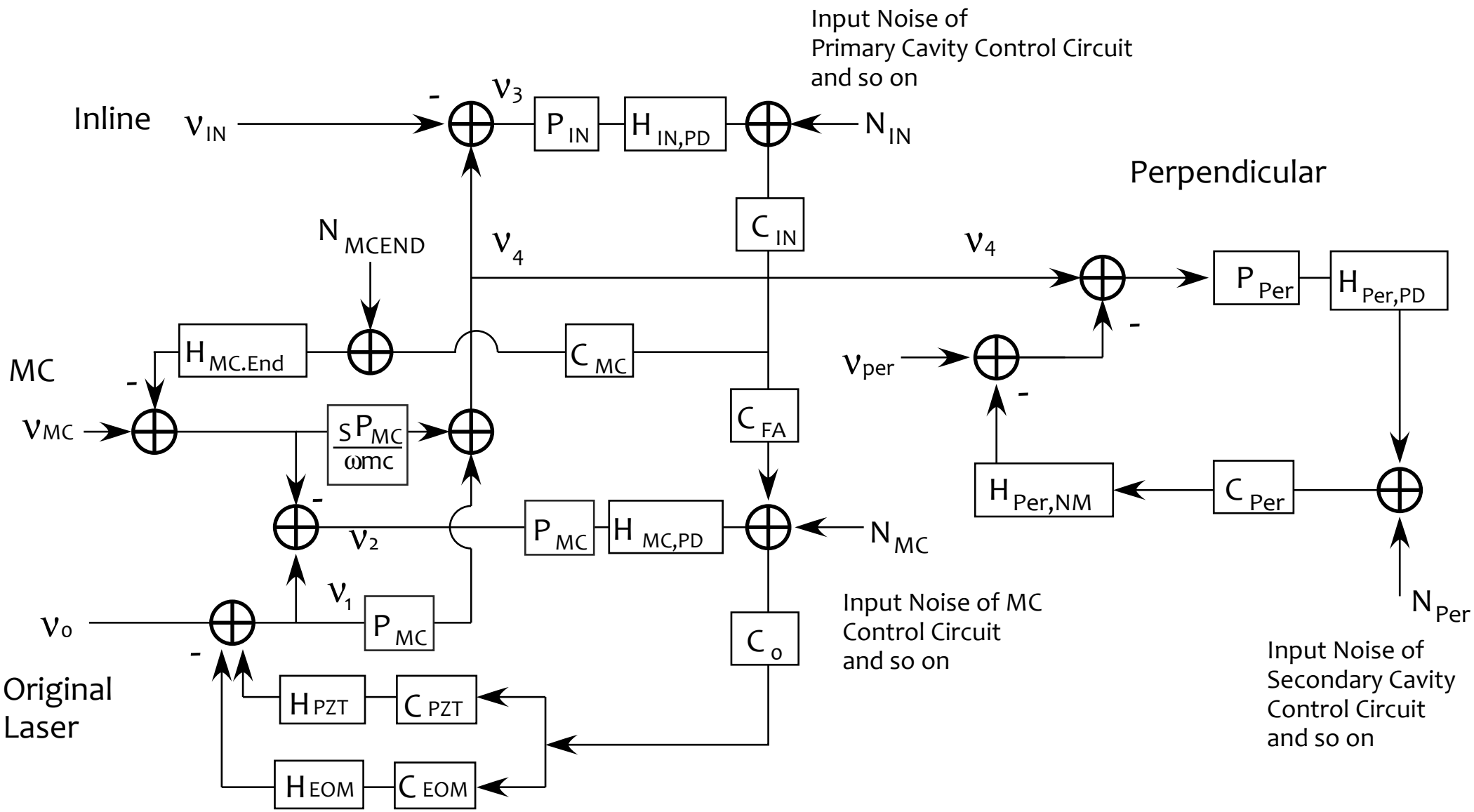# CLIO MC, Primary, Secondary Cavity Servo Block Diagram (20090123)