Basic Tutorial: Noise Coupling

Keiko Kokeyama

July 3rd, 2014

DetEng Tutorial

Preface

- Explanations are made as simple as possible.
  Please do not hesitate to stop me when the simplicity is not enough!
- We will go through some algebra. Have a pencil and paper to try by yourself.
- Sometimes very simple picture is not accurate.
  Please see the references if you'd like to learn deeply.
- A lot of contents are borrowed from K. Arai's basic lecture (internal document in Japanese).
- My hope is to provide some experimental picture to inspire operators, detector and detchar group.

Contents

Our goal is to understand "Noise Budget"!

1. Introduction
   - ALIGO interferometer
   - Why Do You Control The Interferometer?
2. Basic of control loop
   - Control loop
   - Calibration
3. Noise coupling to DARM

1. Introduction

ALIGO Interferometer (ifo)

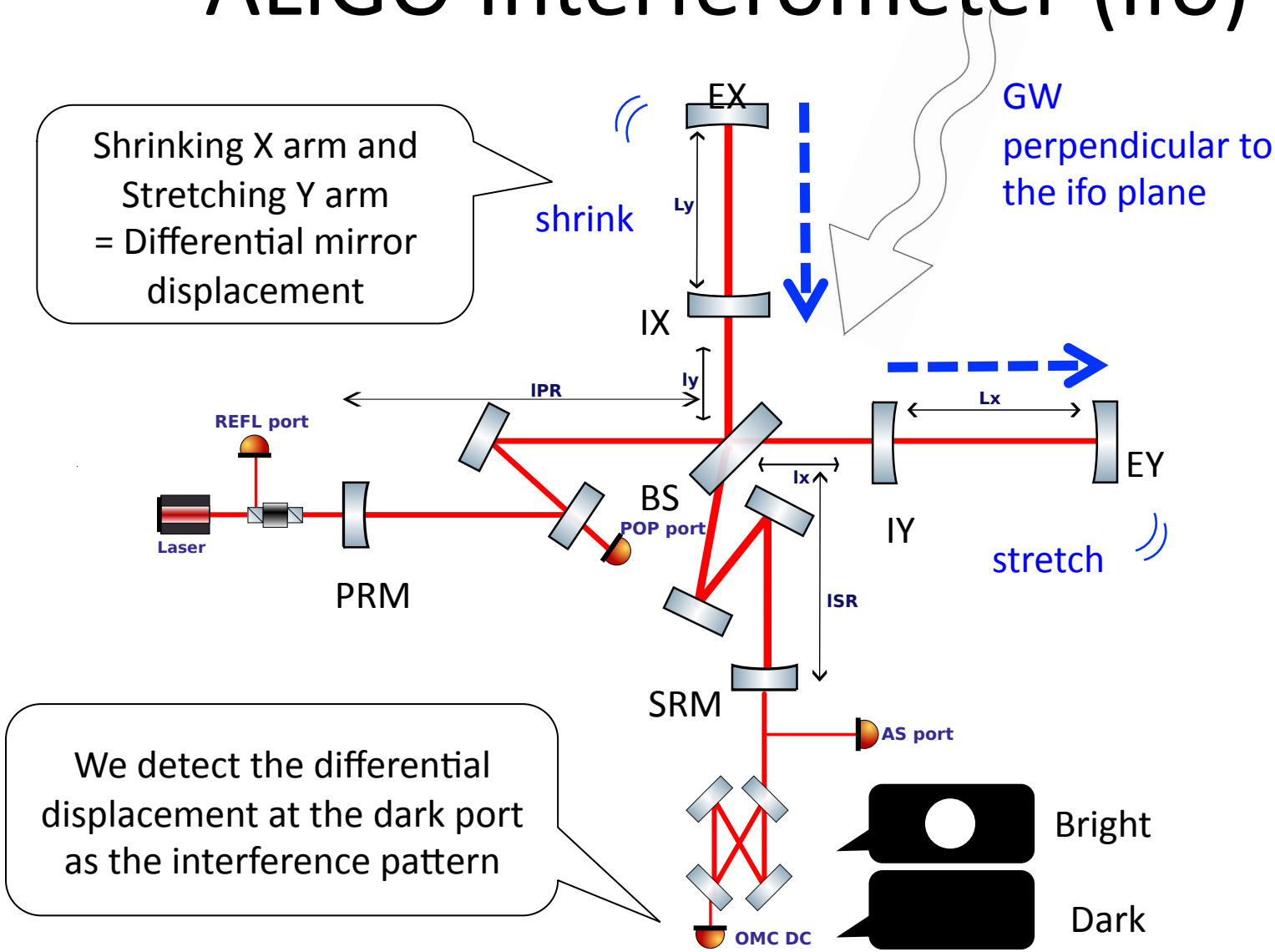

Why Interferometer Control?

- There are many many control loops in the ifo

- Why do we need the control system?

  Can't we just keep seeing the dark port PD?

Interferometers can detect the differential motion only when it satisfies a certain condition!!

When the ifo can work?

- Ifo is a non-linear sensor to mirror displacement
- Ifo can work as the only when the mirrors are around the operational points (~λ/1000)

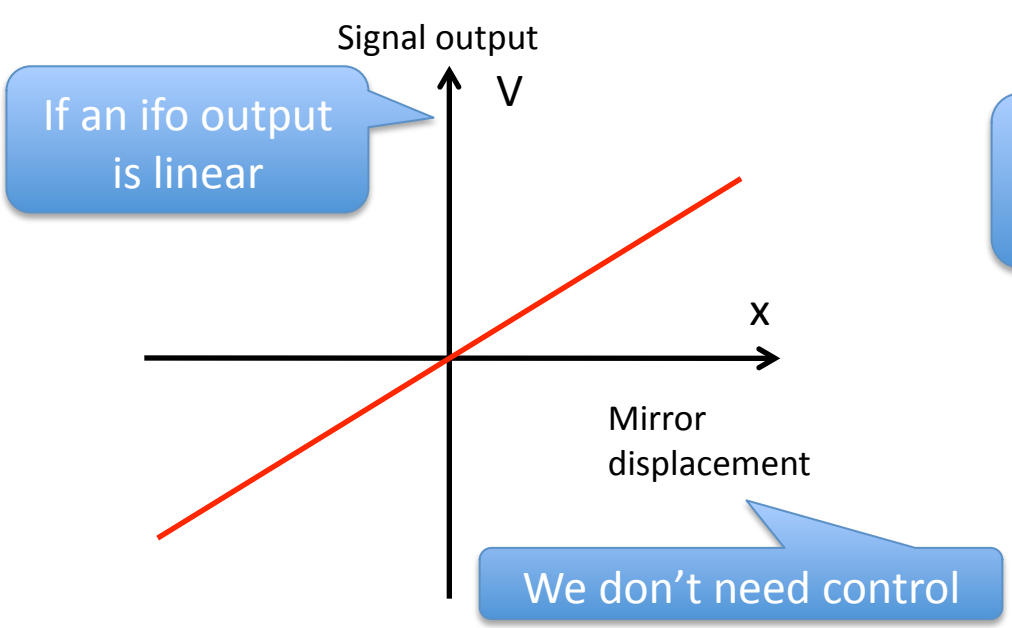

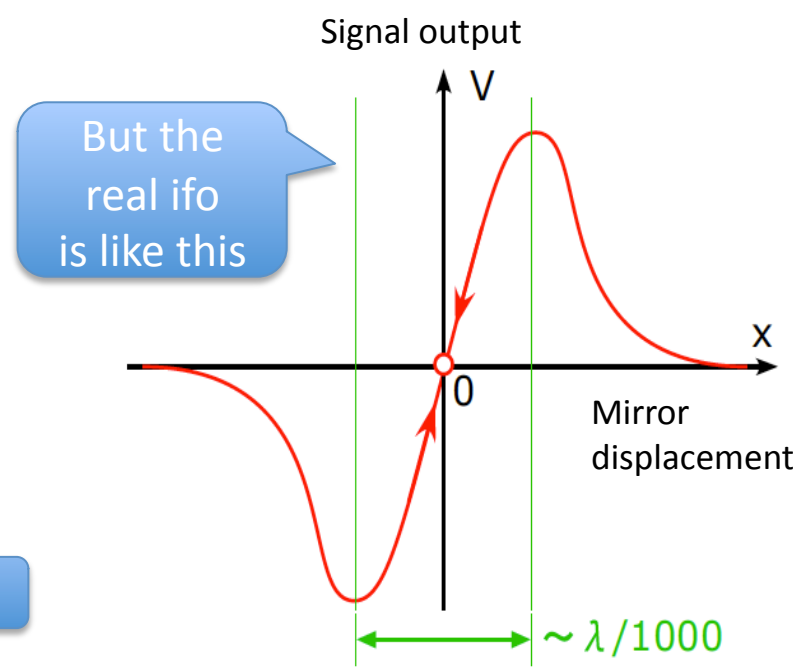

Linearlize the ifo response

- Place the mirrors at the operation points, where the ifo can work as the linear sensor
- Mirror positions are controlled by actuators (BOSEM, ESD)
- We want to keep the ifo response linear all the time

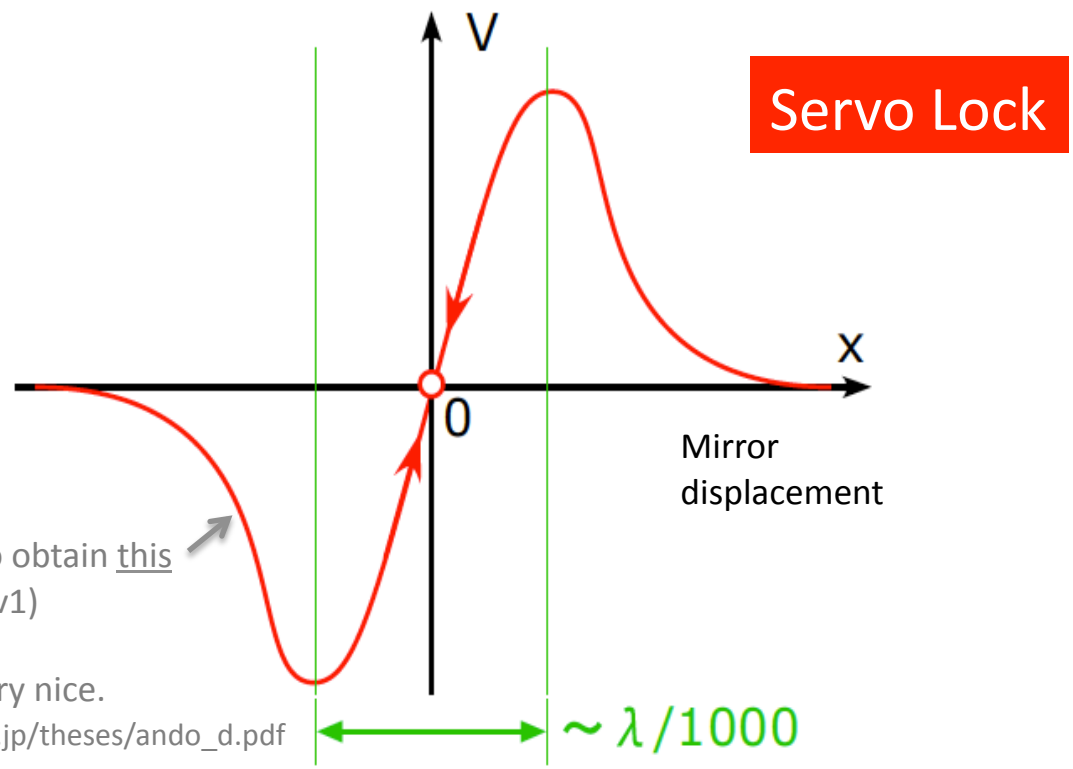

(*) ISC references to see how to obtain this
- my DRMI tutorial (G1301236-v1)
- Any experimentalists' thesis.
- M Ando's thesis (Chap 4) is very nice.
  http://t-munu.phys.s.u-tokyo.ac.jp/theses/ando_d.pdf

When the mirrors are controlled

With the control, all the optical cavities are resonant

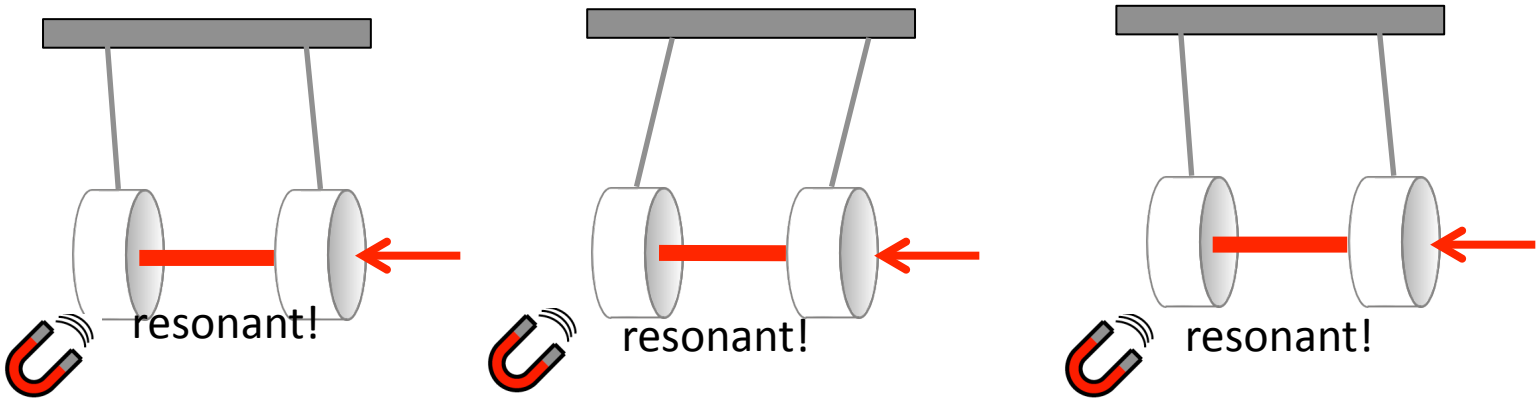

Without the control, mirrors are randomly moving

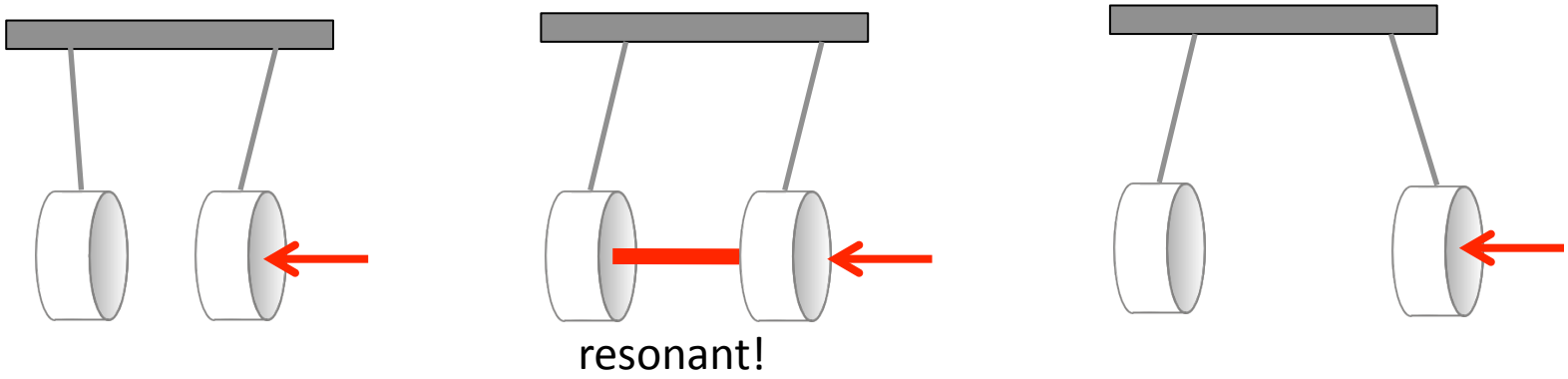

2. Control Loop

Feedback Control Loop

Simple Picture

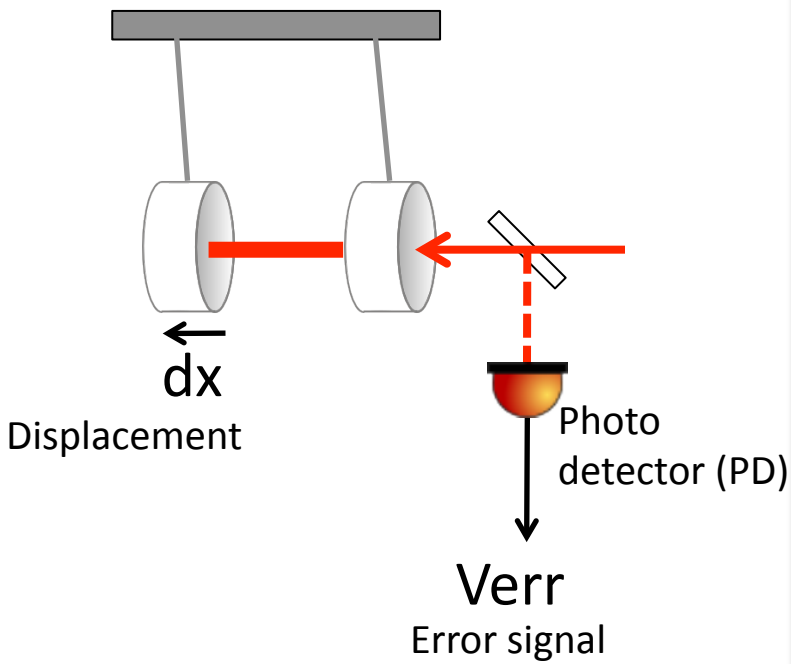

Block Diagram

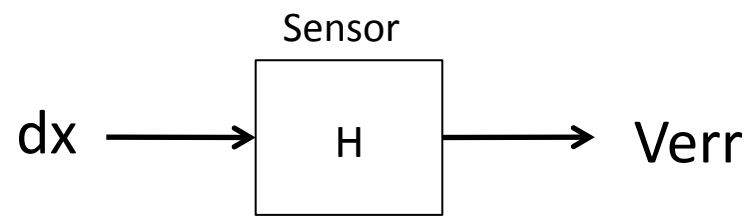

If the sensor is liner,

$$dx = Verr / H$$

We do not need any controls

(*) again, see ISC references for how to produce Verr

Feedback Control Loop

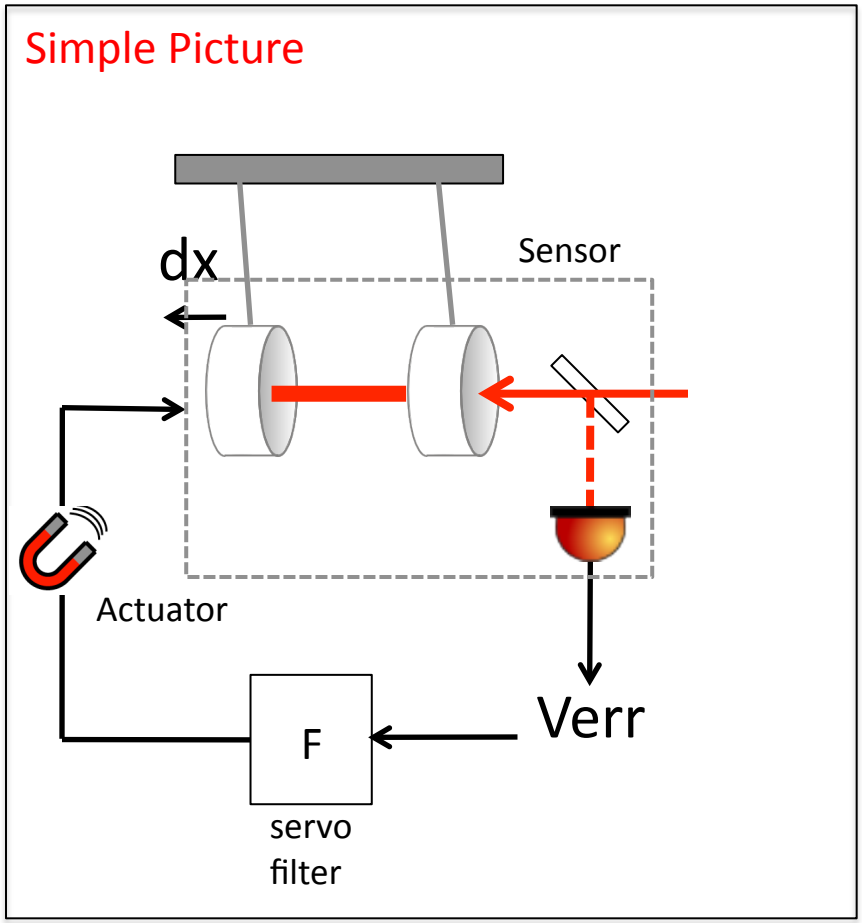

(*) again, see ISC references for how to produce Verr

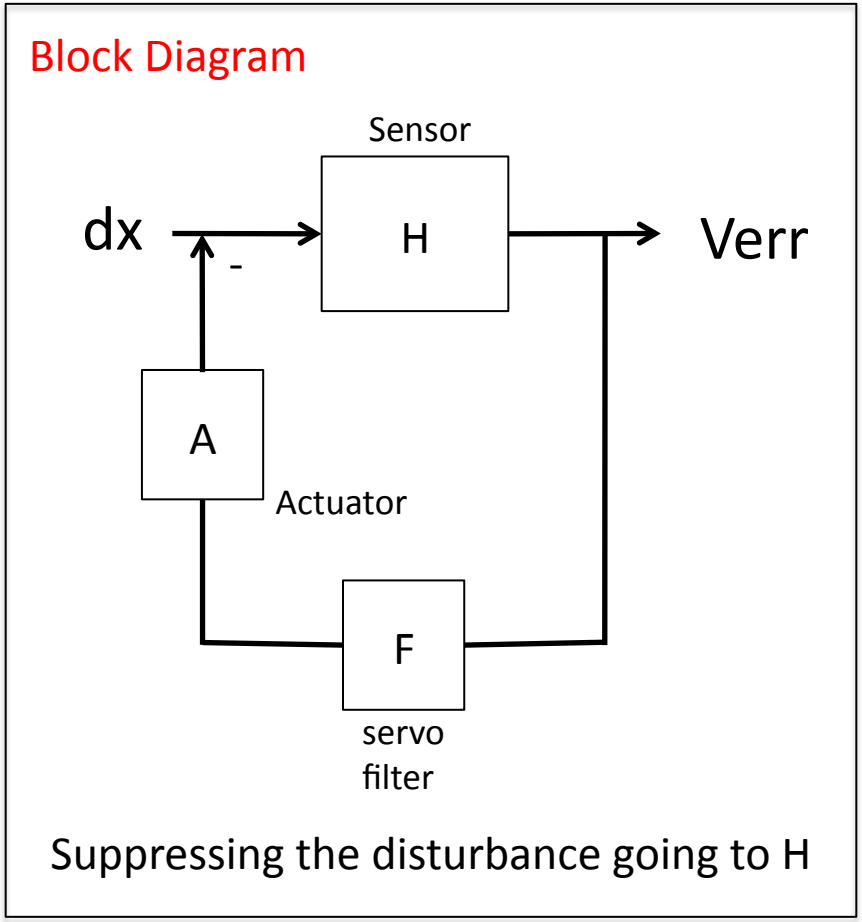

(*) Here sensor includes the optical response for simplicity

How does the loop work? 1

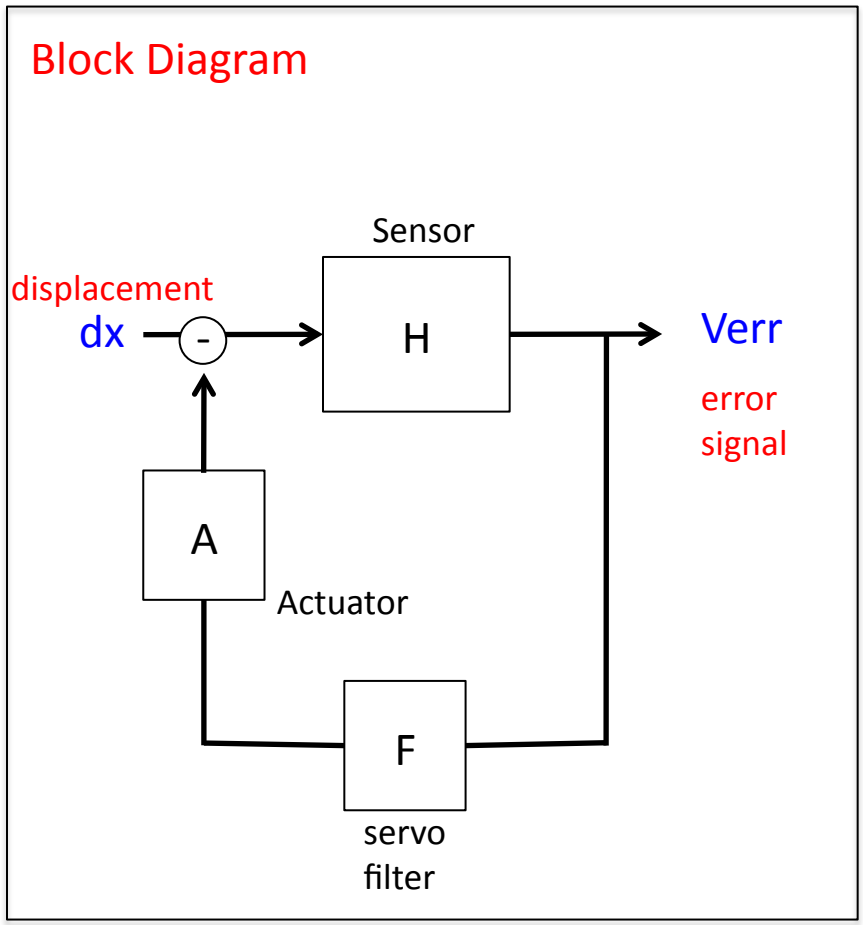

Control loop calculation

How does the loop work? 2

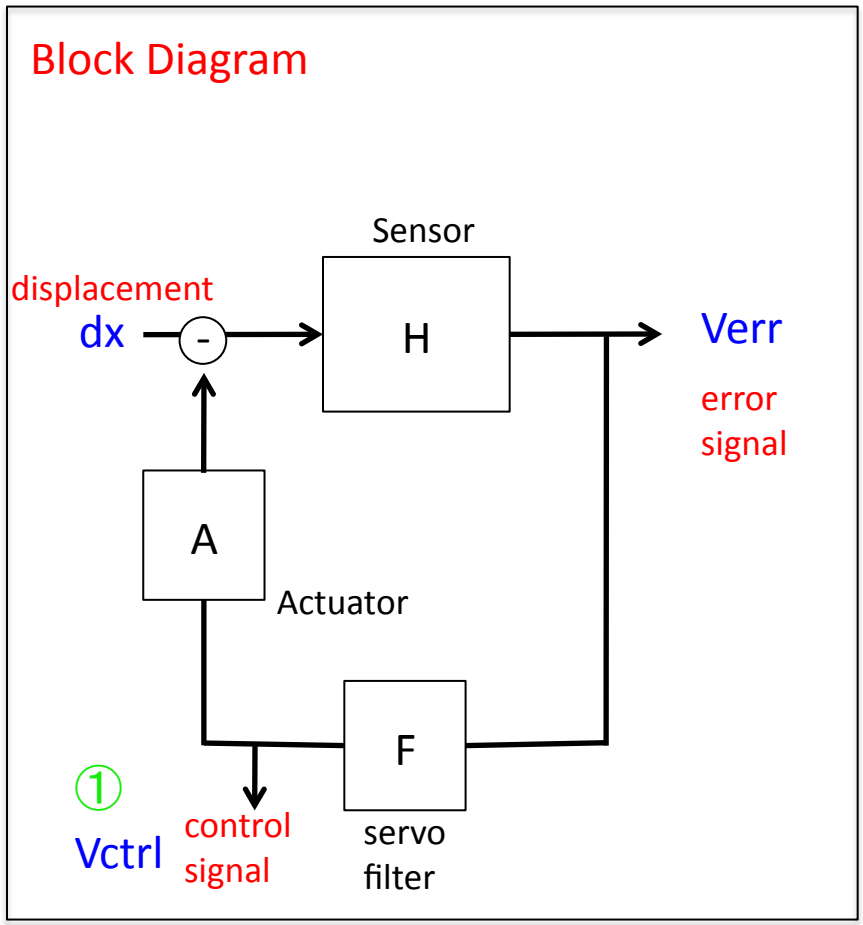

Control loop calculation

① Vctrl = Verr × F

How does the loop work? 3

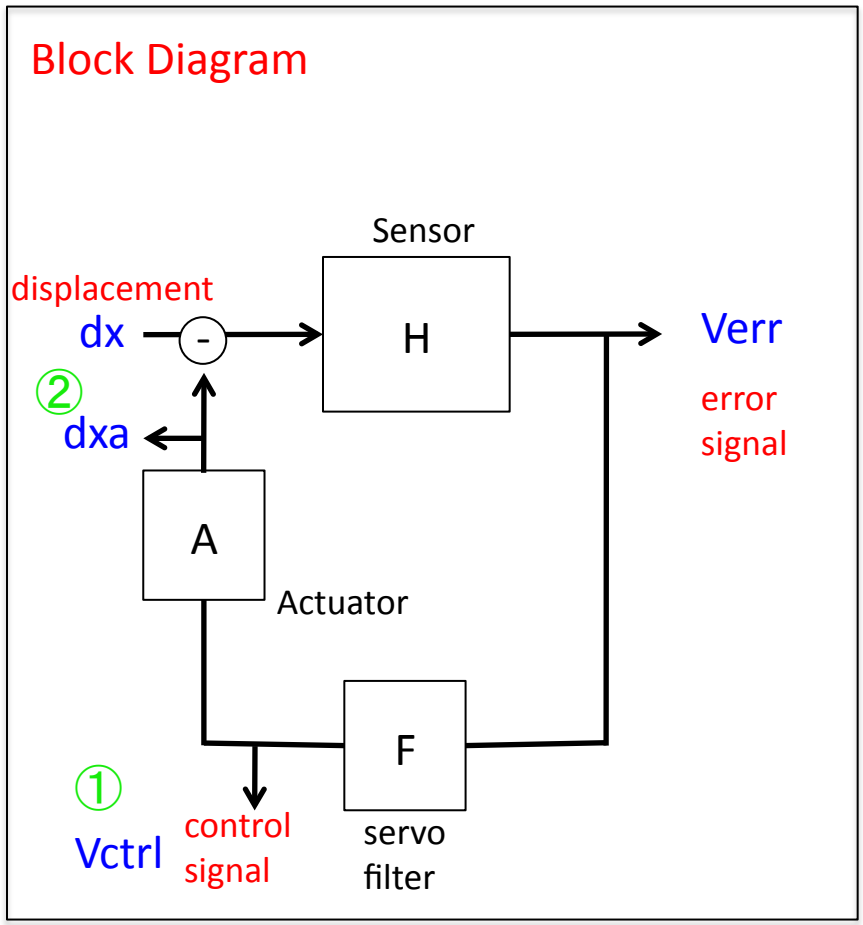

Control loop calculation

① Vctrl = Verr × F

After Actuator, point ②

② dxa = Vctrl × A
= Verr × F × A

How does the loop work? 4

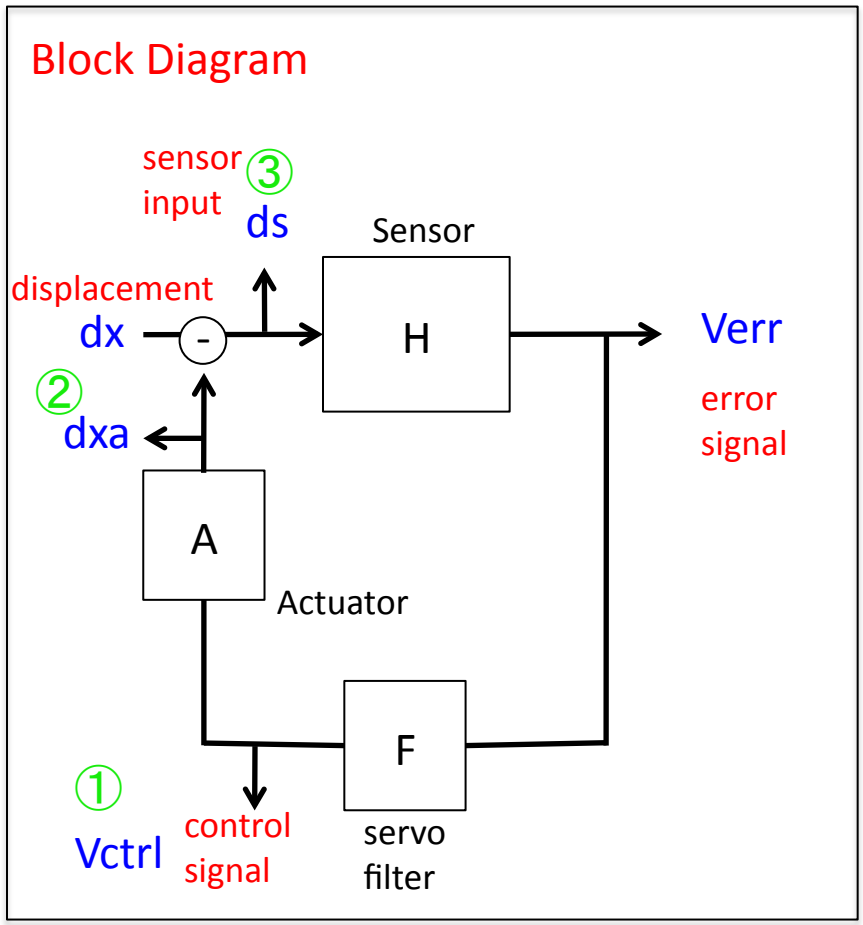

Control loop calculation

① Vctrl = Verr × F

After Actuator, point ②

② dxa = Vctrl × A
= Verr × F × A

③ ds = dx - dxa
= dx - Verr・F・A

How does the loop work? 5

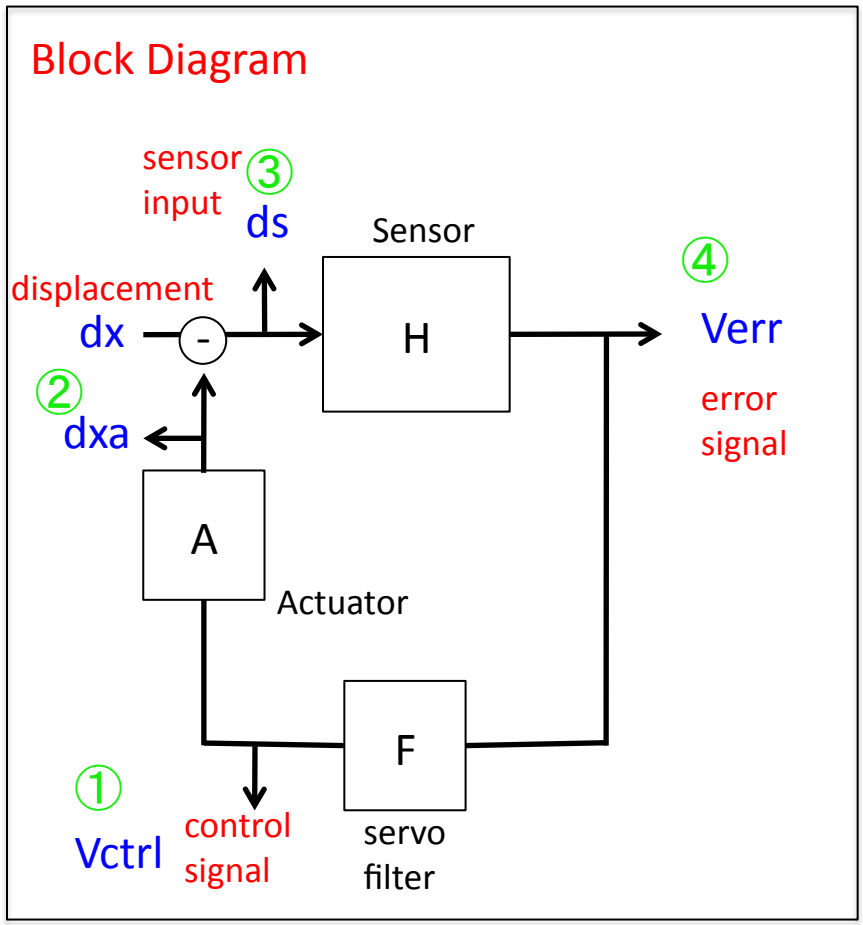

Control loop calculation

① Vctrl = Verr × F

After Actuator, point ②

② dxa = Vctrl × A
= Verr × F × A

③ ds = dx - dxa
= dx - Verr・F・A

④ Verr = ds × H
= (dx - Verr・F・A) × H

How does the loop work? 6

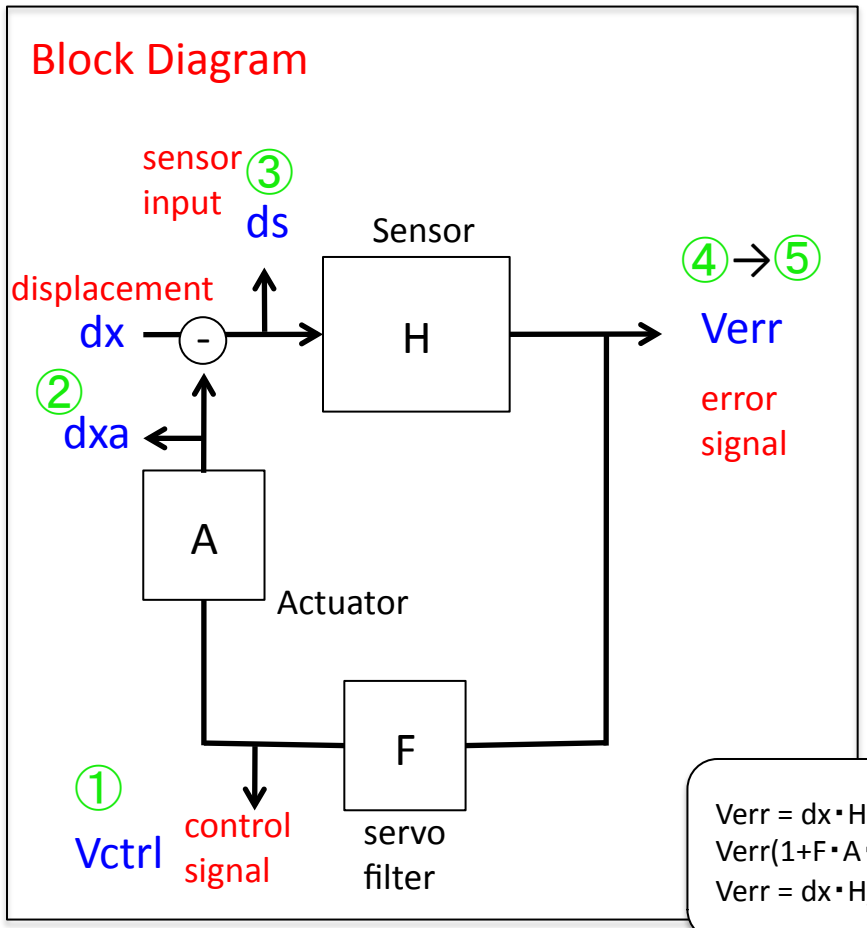

Control loop calculation

① Vctrl = Verr × F

After Actuator, point ②

② dxa = Vctrl × A
= Verr × F × A

③ ds = dx - dxa
= dx - Verr・F・A

④ Verr = ds × H
= (dx - Verr・F・A) × H

⑤ Solving ④ about Verr

$$\text{Verr} = \frac{\text{dx H}}{1+\text{F}\cdot\text{A}\cdot\text{H}}$$

Verr = dx・H - Verr・F・A・H
Verr(1+F・A・H) = dx・H
Verr = dx・H/(1+F・A・H)

How does the loop work? 7

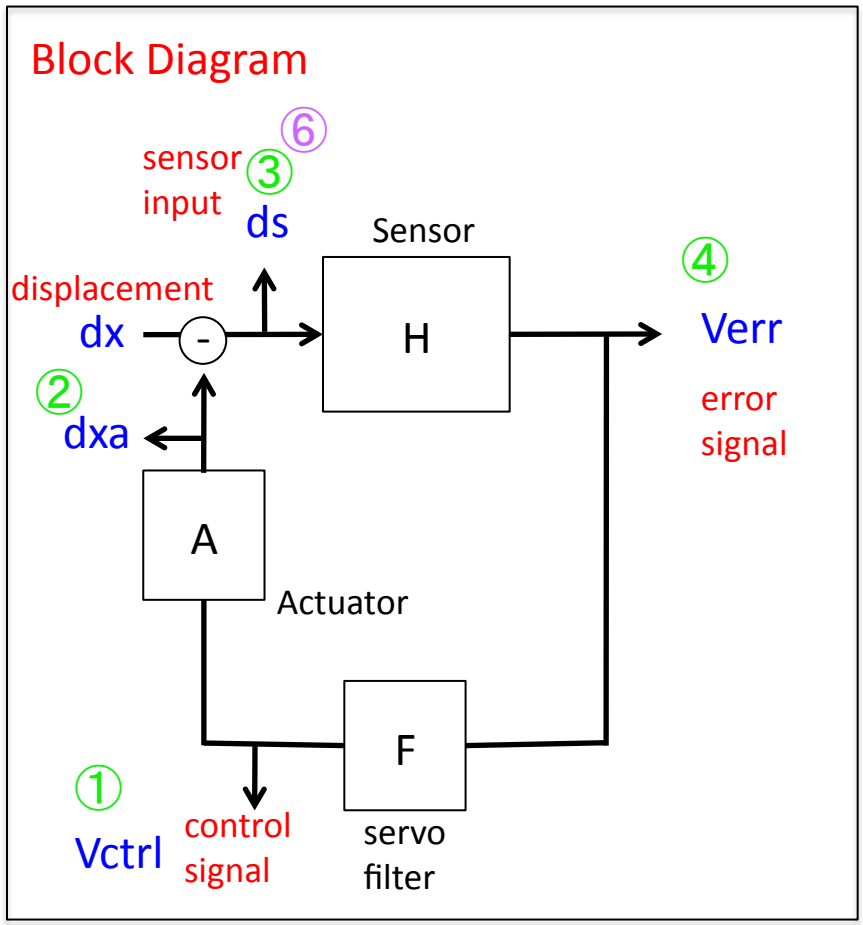

So far,

⑤ $\text{Verr} = \dfrac{\text{dx H}}{1+\text{F}\cdot\text{A}\cdot\text{H}}$

③ $\text{ds} = \text{dx} - \text{Verr}\cdot\text{F}\cdot\text{A}$

Try the algebra by yourself!!

⑥ Substituting ⑤ into ③

$$\text{ds} = \frac{\text{dx}}{1+\text{F}\cdot\text{A}\cdot\text{H}} = \frac{\text{dx}}{1+\text{G}}$$

The sensor input is suppress by (1+G)!

G ≡ F A H, open loop transfer function

→Now the sensor input is limited within the linear range

How does the loop work? 8

For example, when open loop TF,
G =(FAH)= 1000

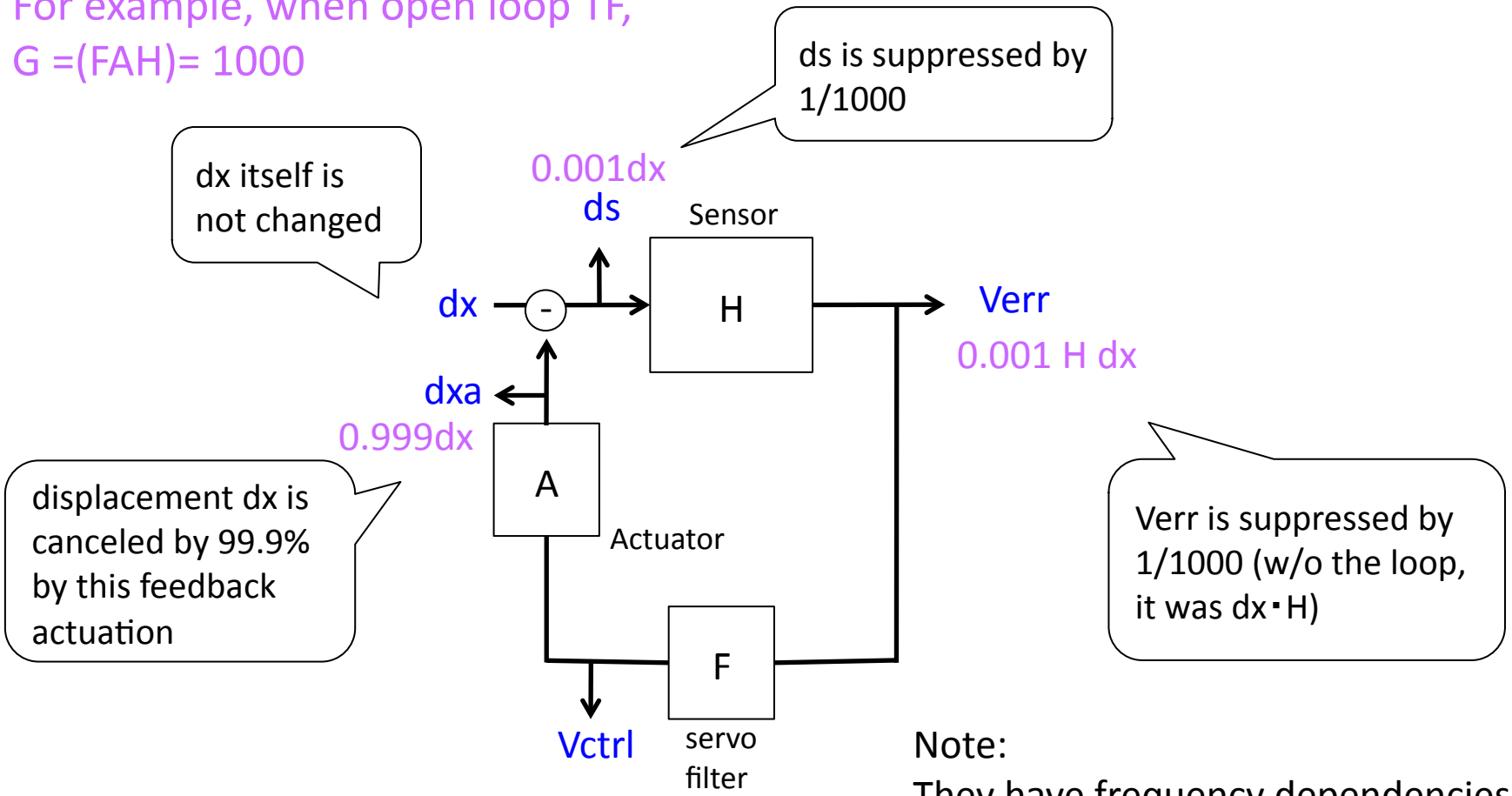

Note:
They have frequency dependencies in the real case!

How does the loop work? 9

Amplitude Spectrum Density of PSL Intensity noise stabilization loop sensors

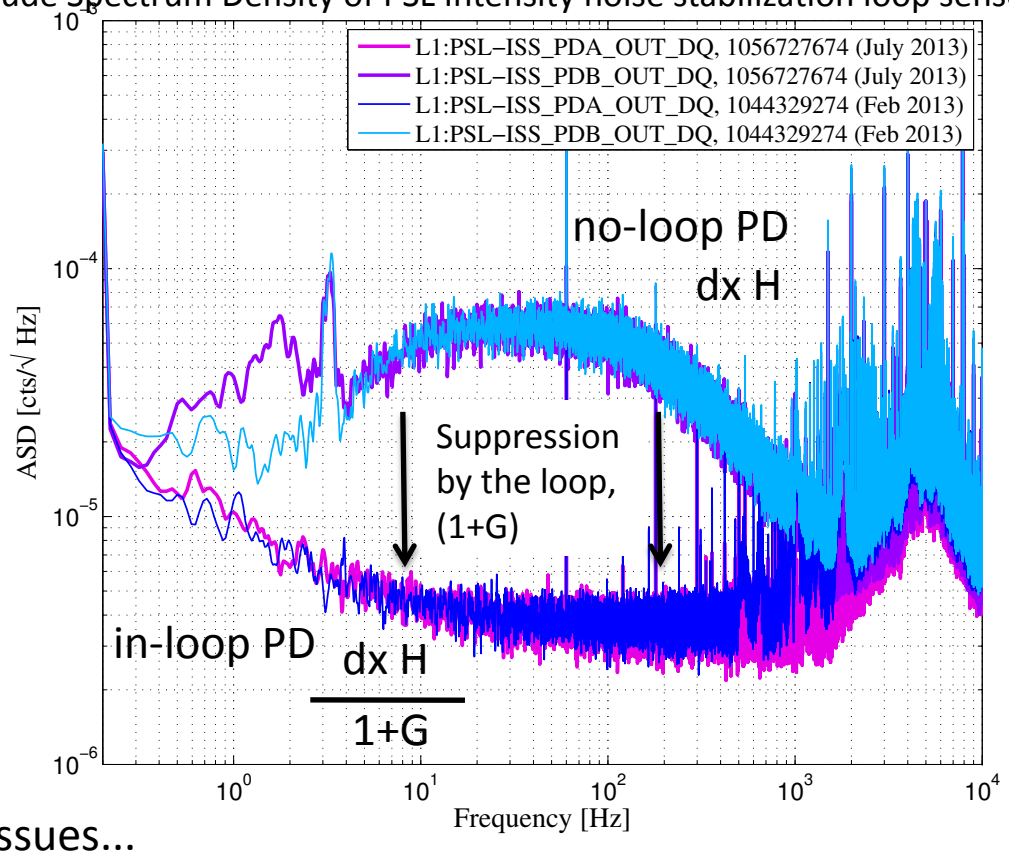

Some real issues...

- If the mirrors are moving too much, we cannot lock the operational point
- Loops are cross-coupled and more complicated (e.g. DARM-MICH)

How does the loop work? 9

Calibration: calculating the dx (=GW signal) equivalent from a signal in the loop

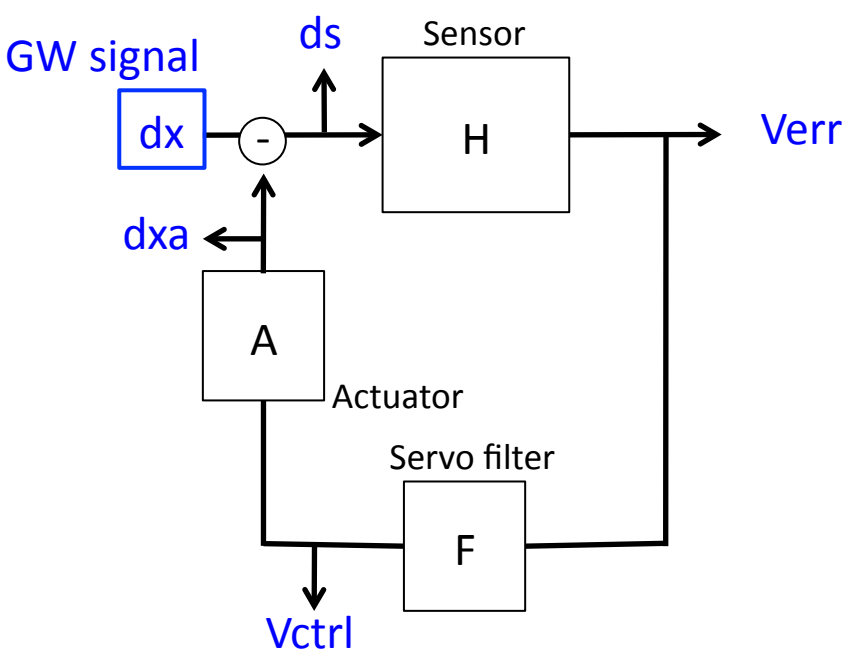

E.g. calculate the dx equivalent from the error signal:

$$\text{Eq. ⑤ } Verr = \frac{dx\ H}{1+G}$$

$$dx = \frac{(1+G)}{H} \times Verr\ [m/Hz^{1/2}]$$

Calibration factor from Verr to dx point

In the real measurement, you need
(1) Verr measurement
(2) G measurement (3) sensor response H

Summary of the control part

- Ifo is a nonlinear devise
- That's why we need to control the mirrors

- We *stop* the ifo mirrors so that the ifo response is in its linear range using the feedback control
- Signals are affected – suppressed – in the loop
- Equivalent dx can be calculated using *calibration factor*

This control part explanations are super simplified therefore not accurate. Please see textbooks in control theory, or see Luca Matone's very nice lecture series, G1100863. G1100863 suggests good textbooks, too.

3. Noise Coupling

Noise couples to DARM

- Noise is displacement not distinguishable from DARM (dx) motion

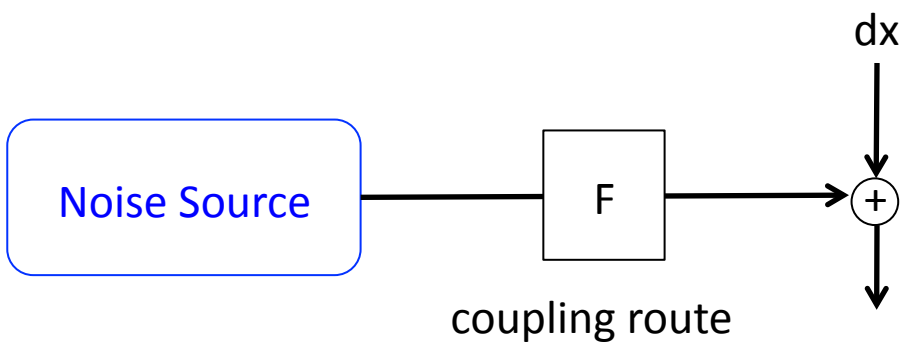

- Let's see the DARM noise budget plot and see how it works

Note: DARM
= differential arm motion (displacement)
= GW displacement
= dx in the former loop picture

Noise Budget in DARM

(1) Measured Noise

Calibrated DARM motion

Note:

In reality, we use both error and control signals for the calibration.

We will go through:

(1) Seismic Noise

(2) Shot noise

(3) MICH & SRCL coupling

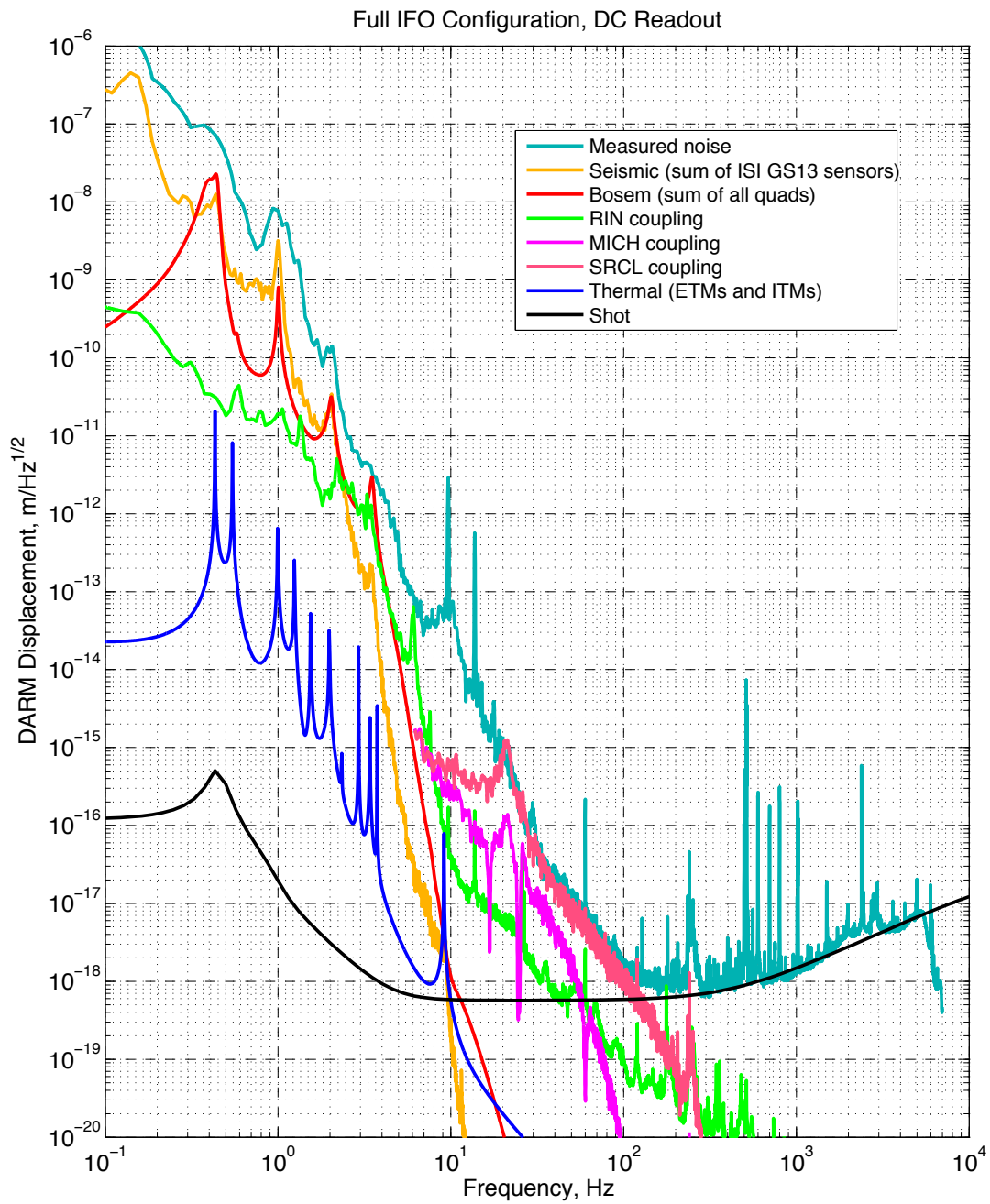

(Simplified) DARM loop

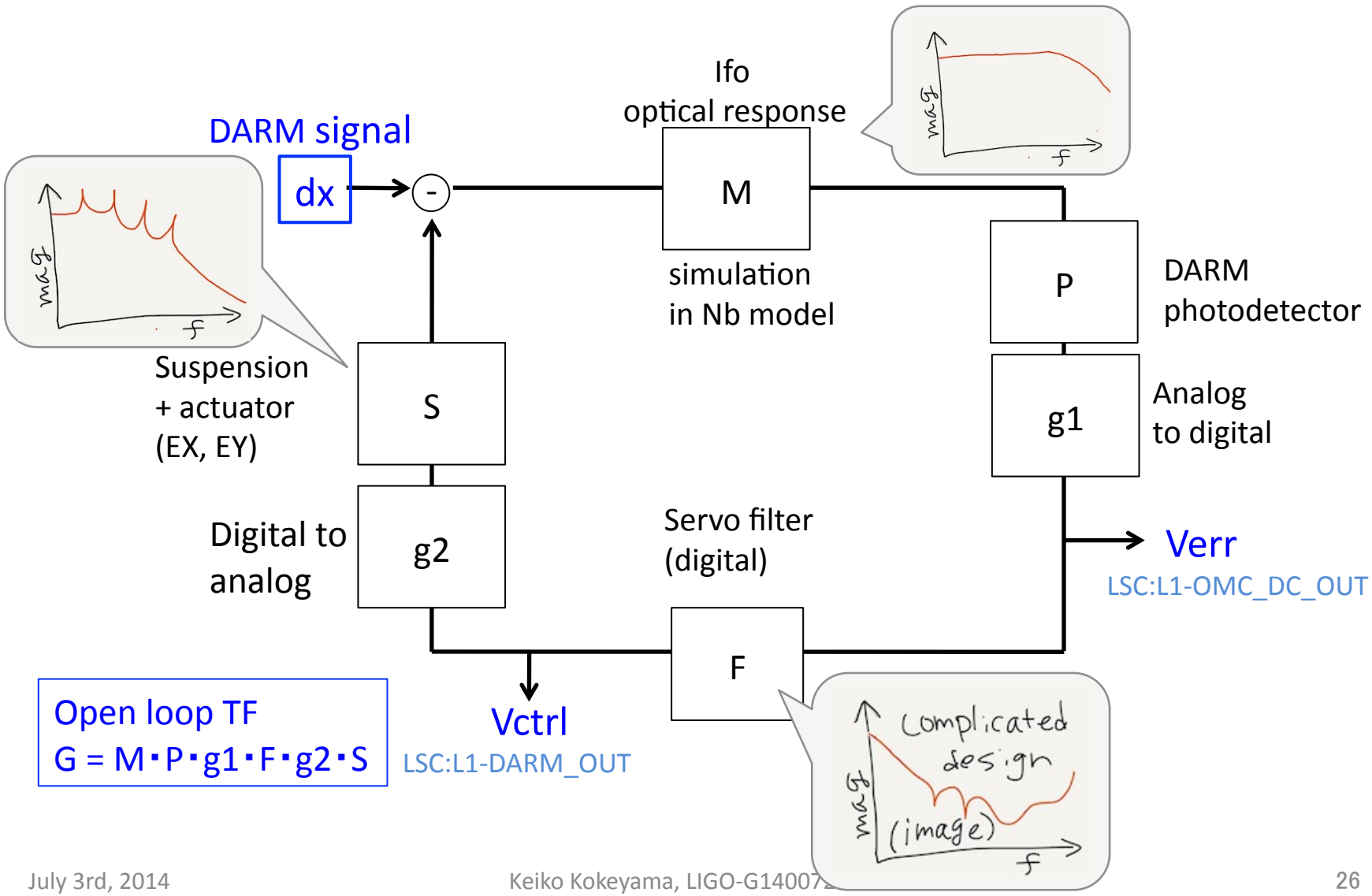

Open loop TF
G = M・P・g1・F・g2・S

(Simplified) DARM error calibration

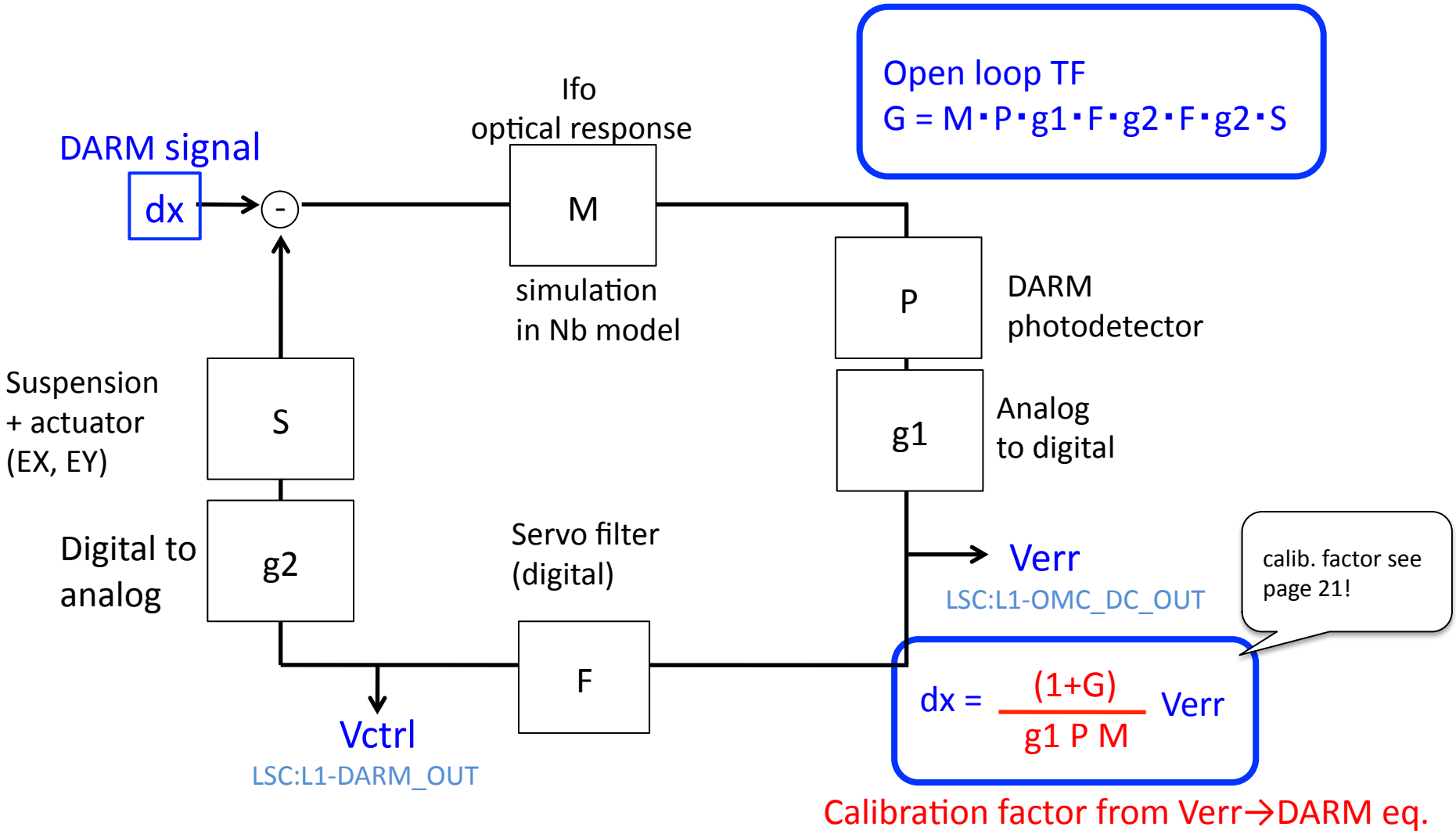

Calibration factor from Verr→DARM eq.

Seismic Noise

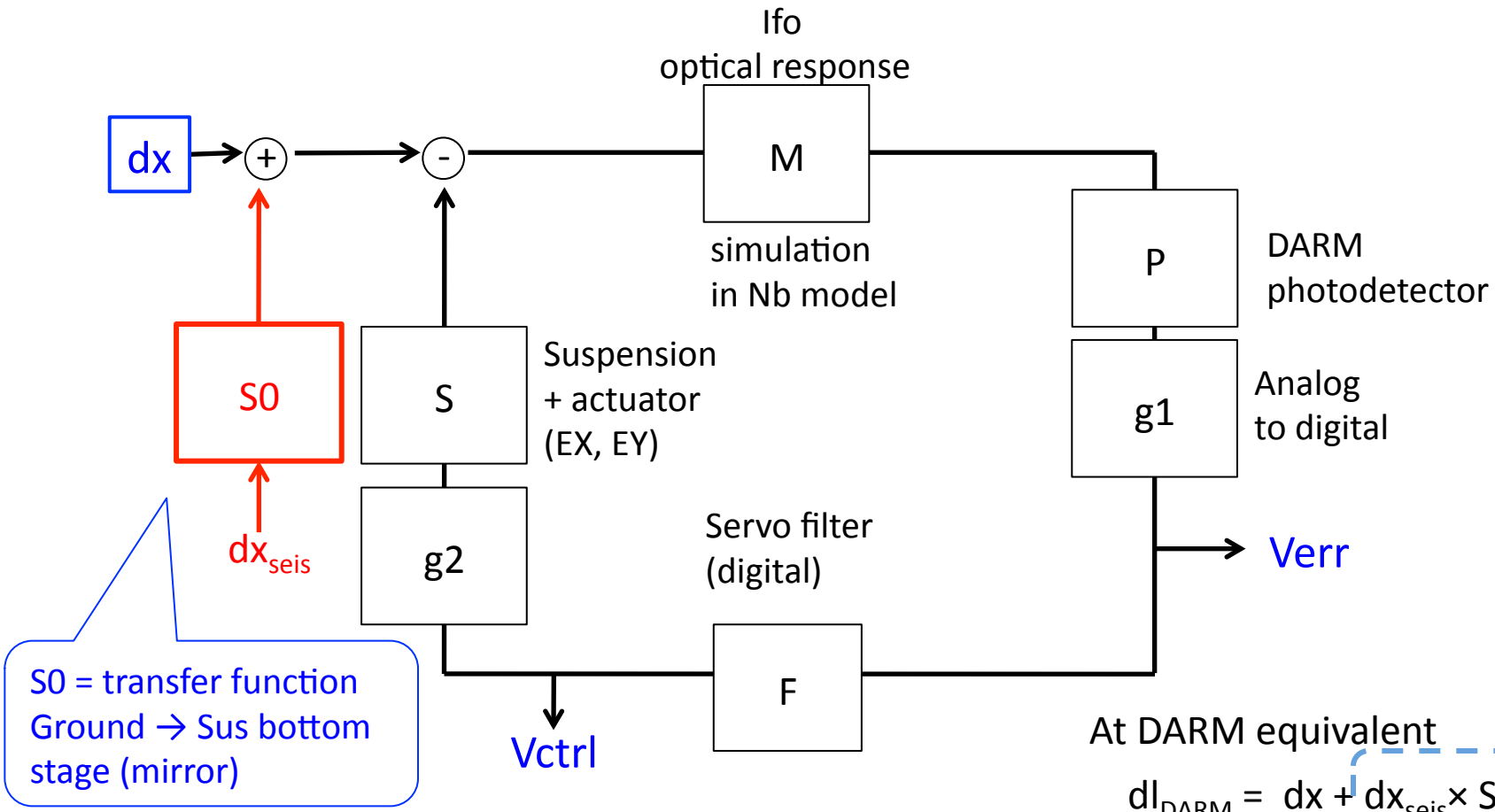

At DARM equivalent

$$dl_{DARM} = dx + dx_{seis} \times S0$$

DARM equivalent:
from seismic noise

Note: In reality, there are seismic upconversions;
= other coupling paths e.g. through scattering light

Shot Noise

- Laser light i.e. photons are quantum particles
- Photon number n is statistically fluctuating sqrt(n).
- It is a fundamental noise

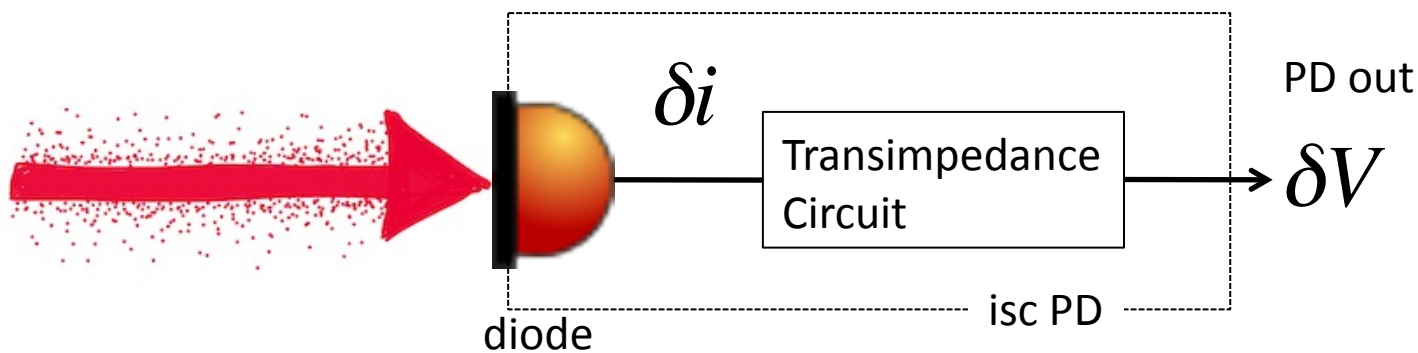

How does it look like at DARM point in the loop?

Shot Noise Coupling

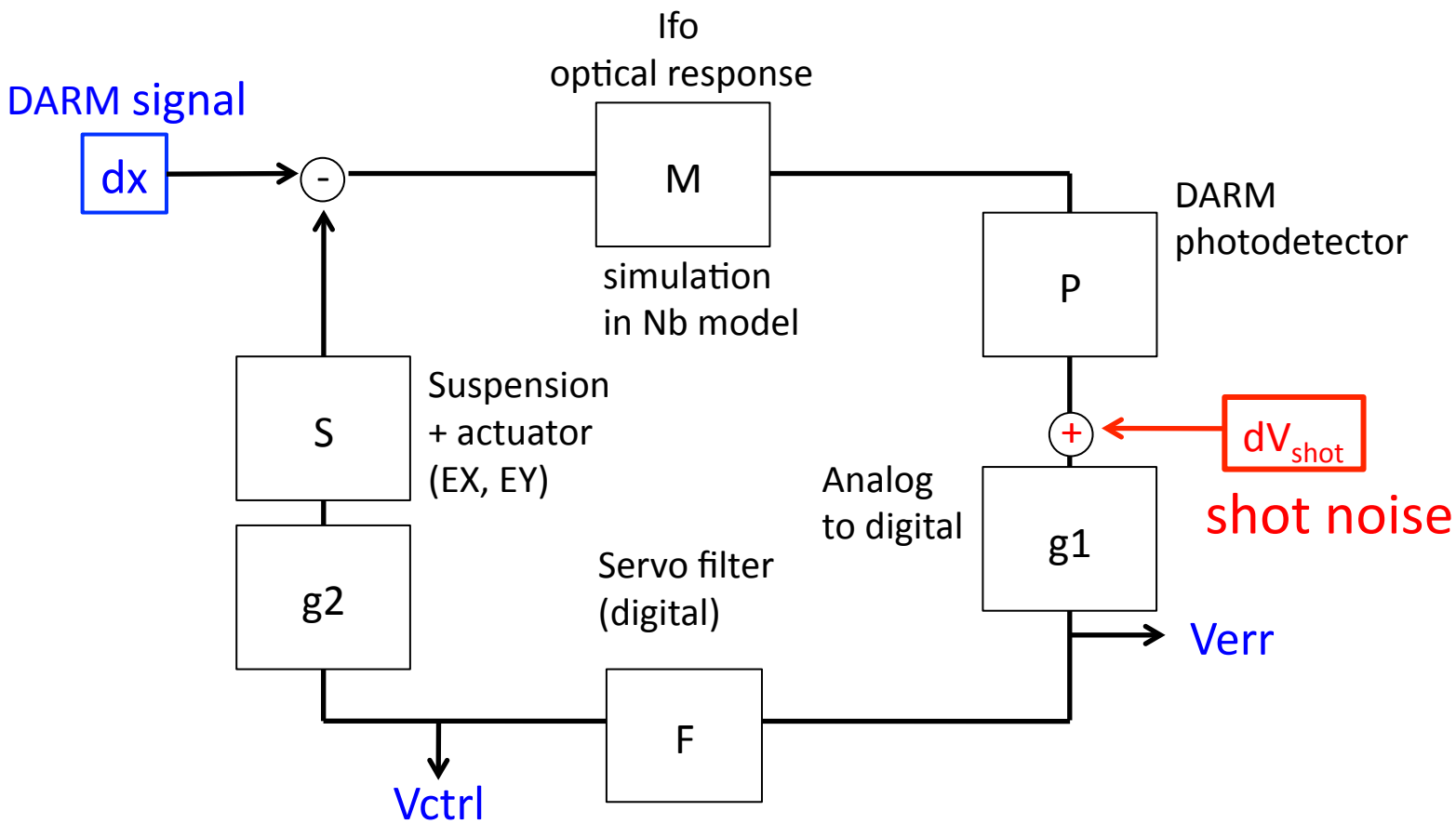

How does dV_{shot} look like at DARM equivalent point?

Shot Noise (algebra)

Try the algebra by yourself!!

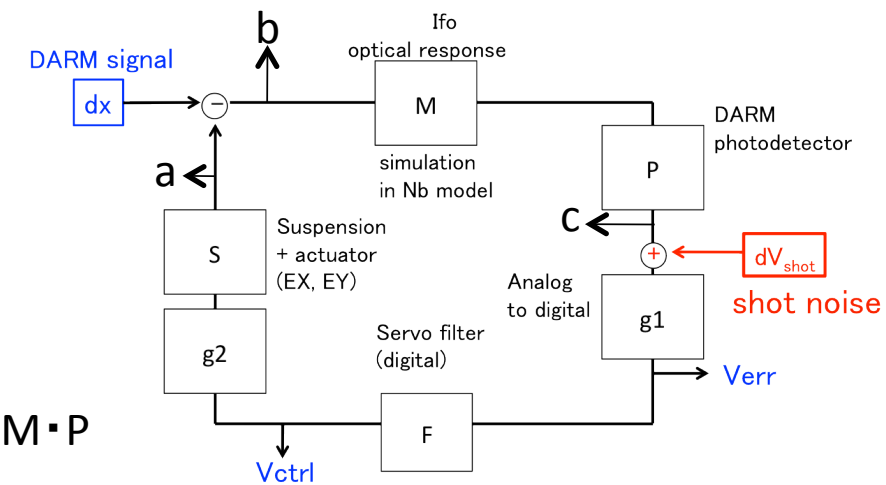

(1) $a = Verr \cdot F \cdot g2 \cdot S$

(2) $b = dx - a$

$= dx - Verr \cdot F \cdot g2 \cdot S$

(3) $c = b \cdot M \cdot P$

$= (dx - Verr \cdot F \cdot g2 \cdot S)\, M \cdot P$

(4) $Verr = (c + dVshot)\, g1$

$= (dx - Verr \cdot F \cdot g2 \cdot S)\, M \cdot P \cdot g1 + dV_{shot} \cdot g1$

$= dx \cdot M \cdot P \cdot g1 - G \cdot Verr + dV_{shot} \cdot g1$

$Verr(1+G) = dx \cdot M \cdot P \cdot g1 + dV_{shot} \cdot g1$

$$Verr = \frac{M \cdot P \cdot g1}{1+G}\, dx + \frac{g1}{1+G}\, dV_{shot}$$

Multiplying the calib. factor,

$$\frac{(1+G)}{g1\ P\ M}$$

, to Verr,

$$dl_{DARM} = dx + \frac{1}{PM}\, dV_{shot}$$

DARM equivalent: from shot noise

SRCL coupling to DARM

The real IFO has many loops to control
all the mirrors.
SRCL is controlling SRM,
to control the signal recycling cavity length

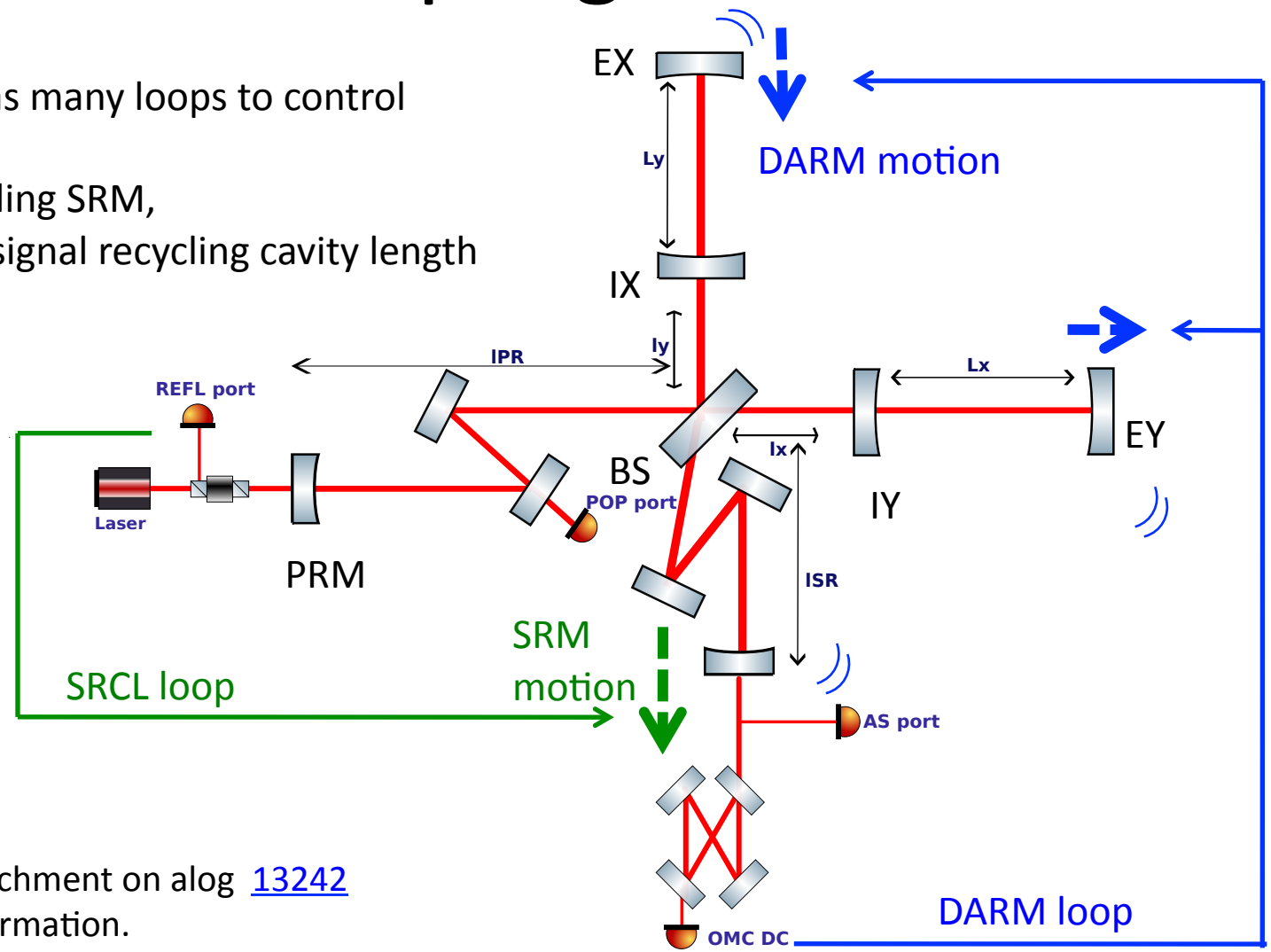

Note:
Please the attachment on alog 13242
for precise information.

SRCL coupling to DARM 2

How SRCL loop couples to DARM?

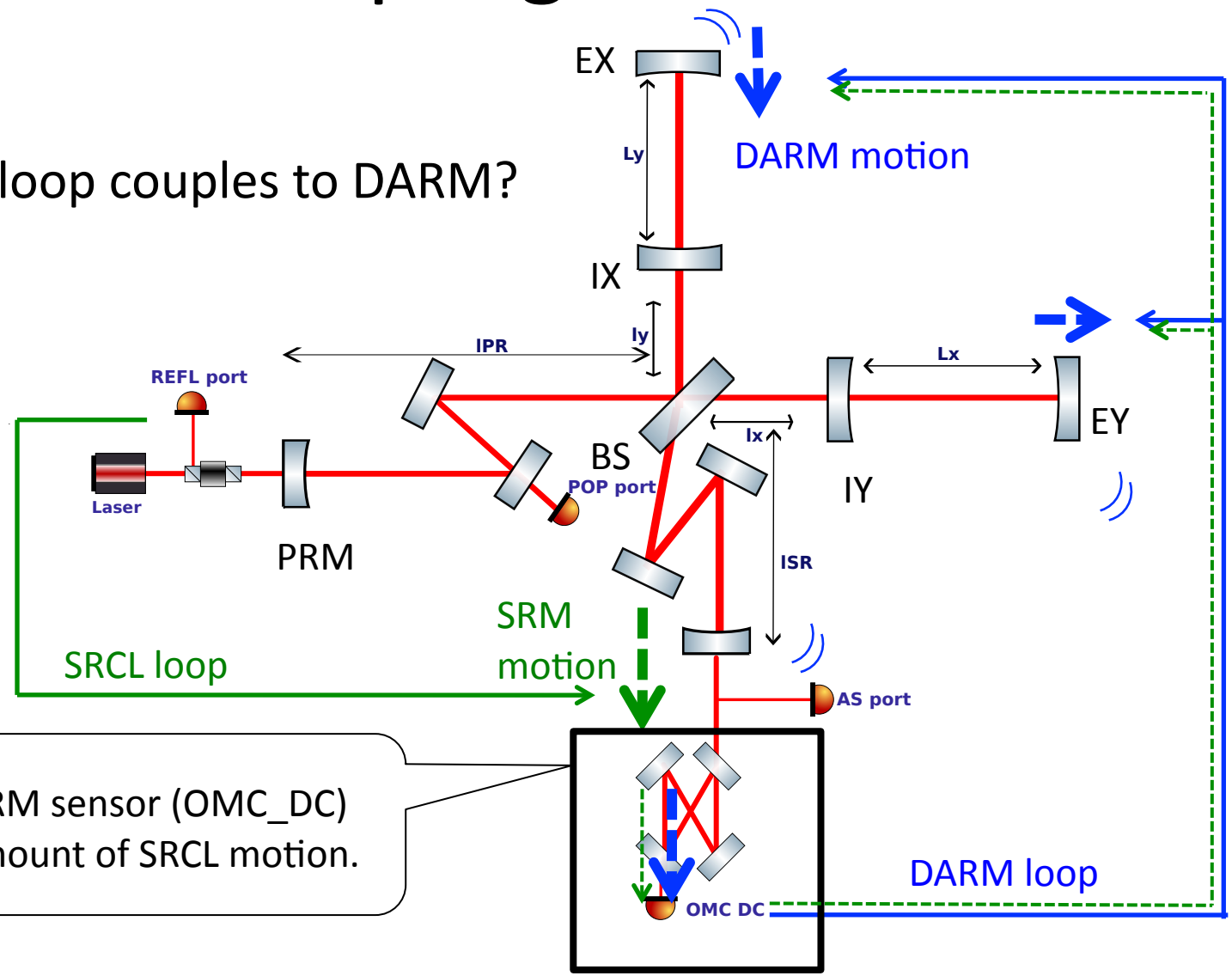

In reality, DARM sensor (OMC_DC) sees some amount of SRCL motion.

SRCL coupling to DARM 3

In the block diagram picture...

Note:
In the real world, there is a path from DARM to SRCL, too.
Actually, from all dofs to all dofs.

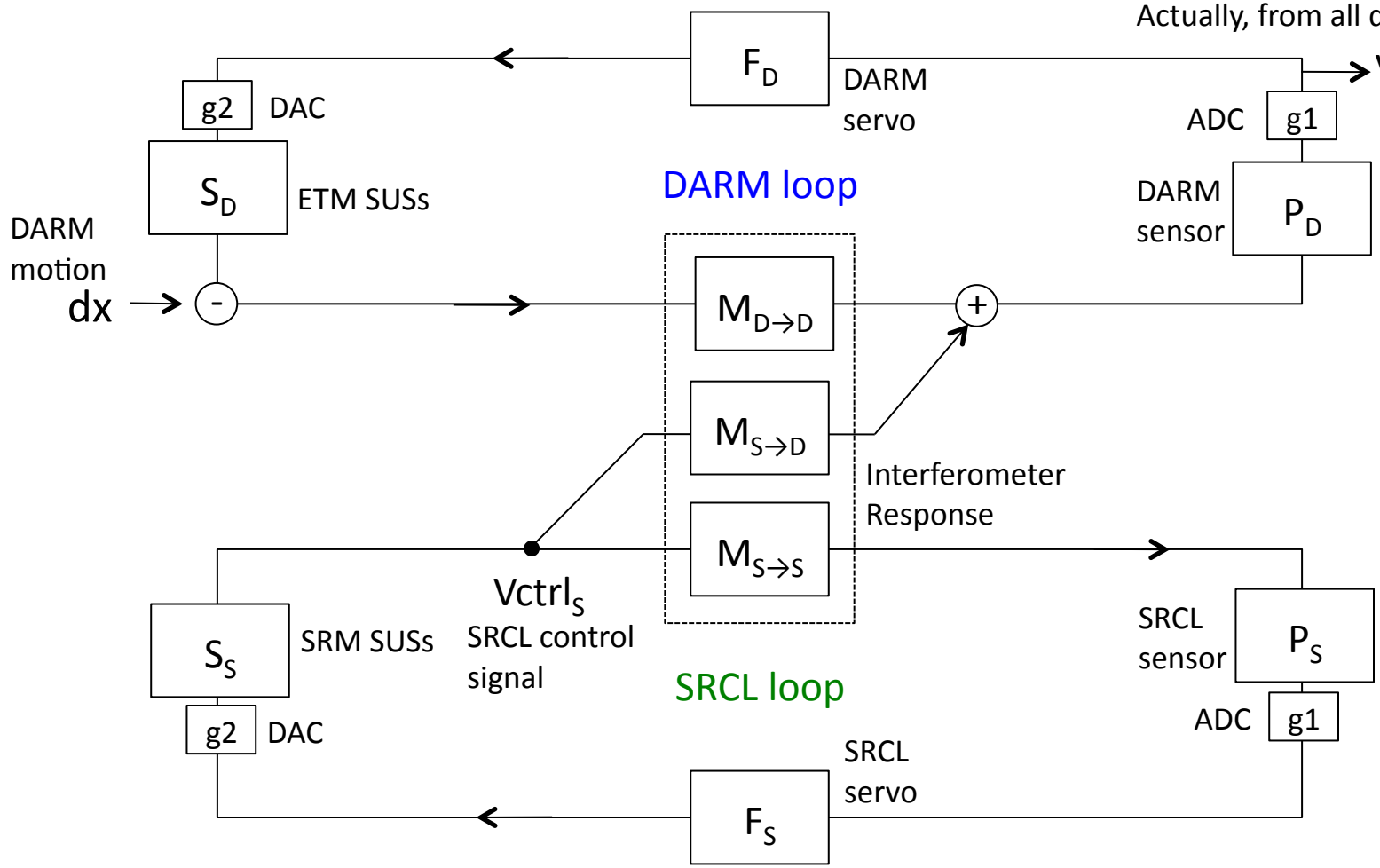

SRCL coupling to DARM 3

In the block diagram picture...

Note:
In the real world, there is a path from DARM to SRCL, too.

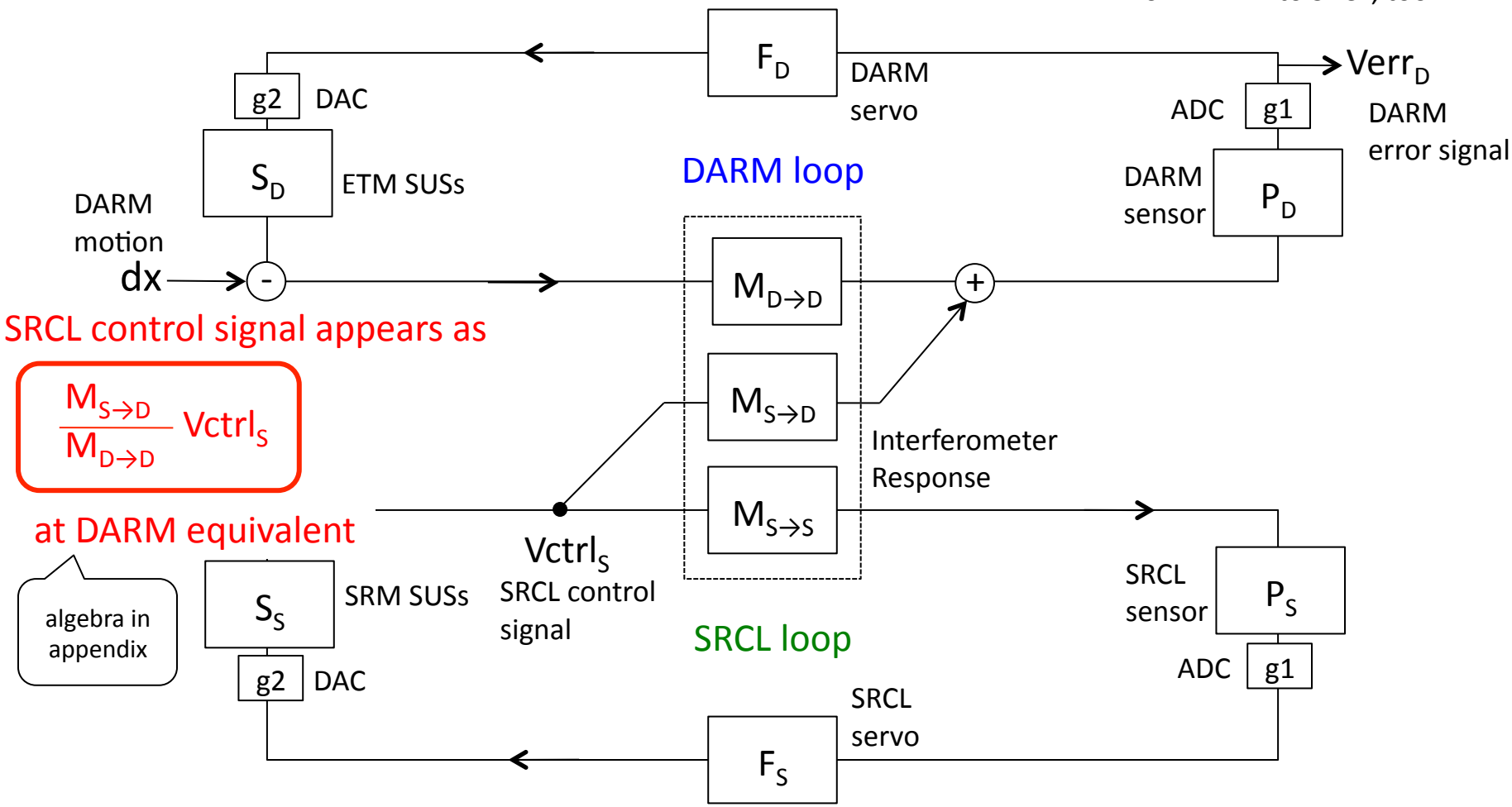

SRCL control signal appears as

$$\frac{M_{S\to D}}{M_{D\to D}} Vctrl_S$$

at DARM equivalent

algebra in appendix

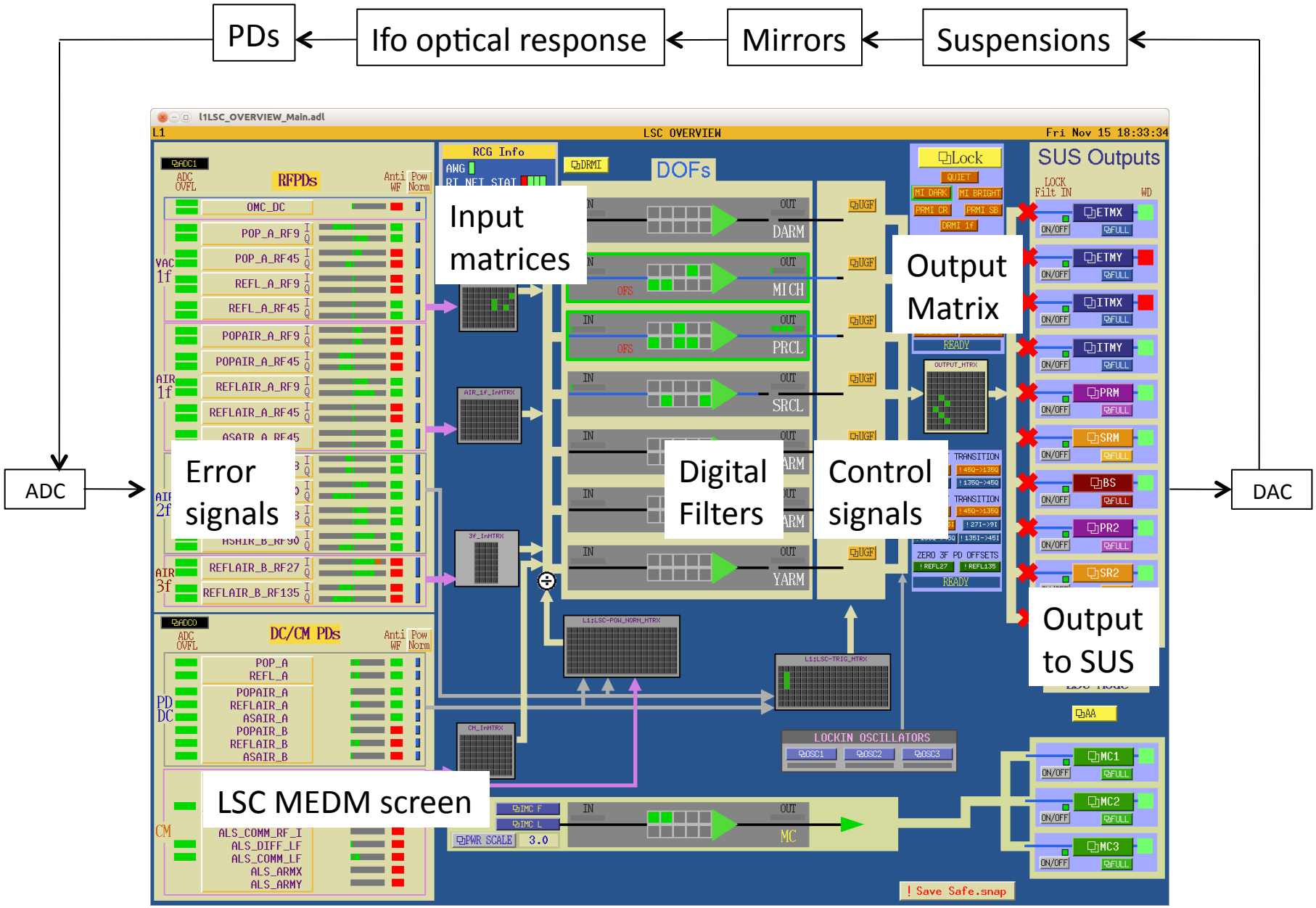
PDs
Ifo optical response
Mirrors
Suspensions
ADC
DAC
Input matrices
Error signals
Digital Filters
Control signals
Output Matrix
Output to SUS
LSC MEDM screen
l1LSC_OVERVIEW_Main.adl
LSC OVERVIEW
Fri Nov 15 18:33:34
RFPDs
DC/CM PDs
DOFs
DARM
MICH
PRCL
SRCL
YARM
MC
Lock
SUS Outputs
ETMX
ETMY
ITMX
ITMY
PRM
SRM
BS
PR2
SR2
MC1
MC2
MC3
LOCKIN OSCILLATORS
! Save Safe.snap

Appendix: algebra on P.35

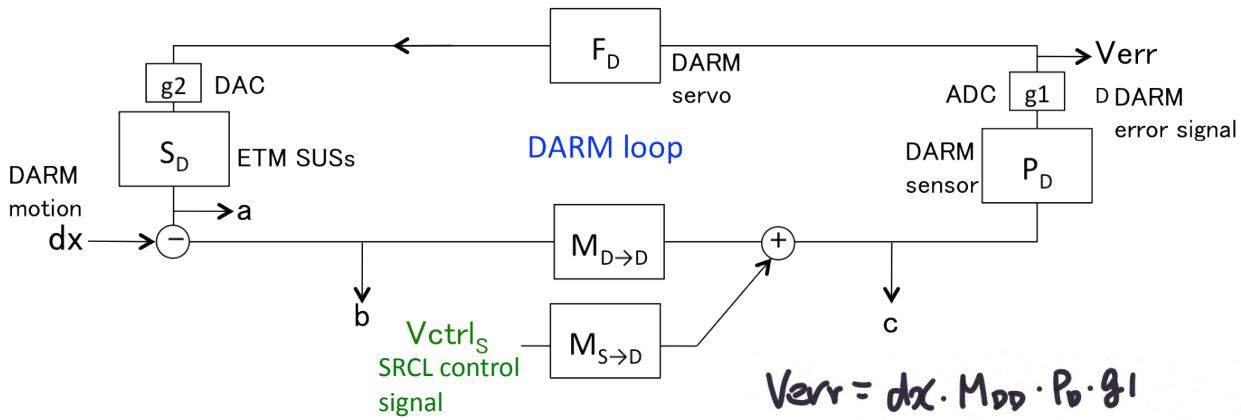

$$a = V_{err} \cdot F_D \cdot g_2 \cdot S_D$$

$$b = dx - a$$
$$= dx - V_{err} F_D g_2 S_D$$

$$c = b \cdot M_{D\to D} + V_{ctrls} \cdot M_{S\to D}$$
$$= (dx - V_{err} \cdot F_D \cdot g_2 \cdot S_D) M_{D\to D} + V_{ctrls} \cdot M_{S\to D}$$

$$V_{err} = c \cdot P_D \cdot g_1$$

$$V_{err} = dx \cdot M_{DD} \cdot P_D \cdot g_1 - \underbrace{V_{err} \cdot F_D \cdot g_2 \cdot S_D \cdot M_{DD} \cdot P_D \cdot g_1}_{=G} + V_{ctrls} \cdot M_{SD} \cdot P_D \cdot g_1$$

$$V_{err}(1+G) = dx \cdot M_{DD} \cdot P_D \cdot g_1 + V_{ctrls} \cdot M_{SD} \cdot P_D \cdot g_1$$

$$V_{err} = \frac{M_{DD} P_D g_1}{1+G} dx + \frac{M_{SD} \cdot P_D \cdot g_1}{1+G} V_{ctrls}$$

Multiplying the calib. factor for Verr,

$$\frac{(1+G)}{g1\ P_D\ M_{D\to D}}$$

$$dl = dx + \frac{M_{SD}}{M_{DD}} \cdot V_{ctrls}$$