Demonstration for a two-axis interferometric tilt sensor in KAGRA

J. Park, K. Kokeyama, K. Shin, T. Akutsu. S. Kawamura, K. Cho.

Photonics Research Lab, Sogang University

CONTENTS

Motivation

- Increase dynamic range

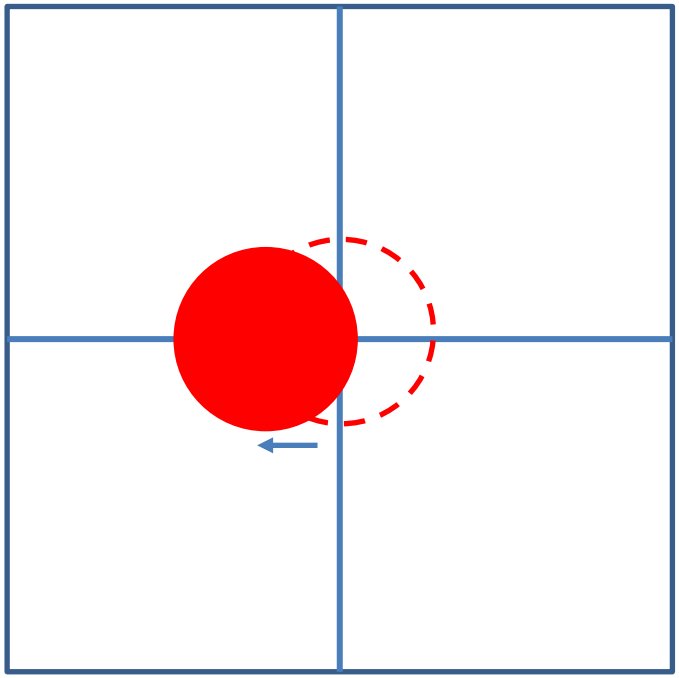

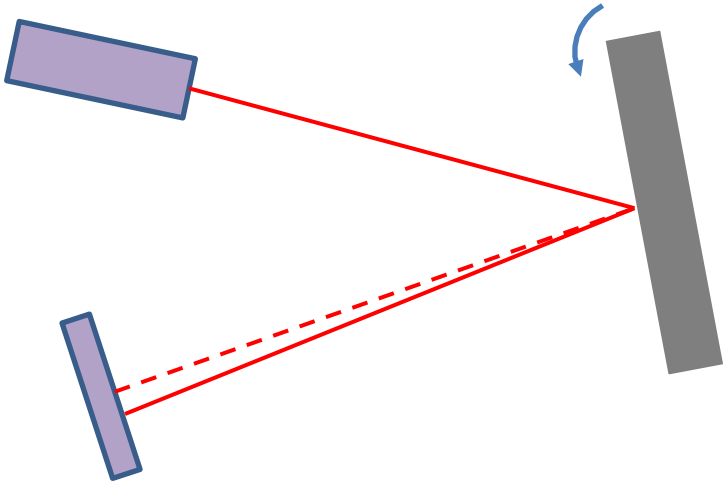

Motivation

- Increase dynamic range
- More accurate

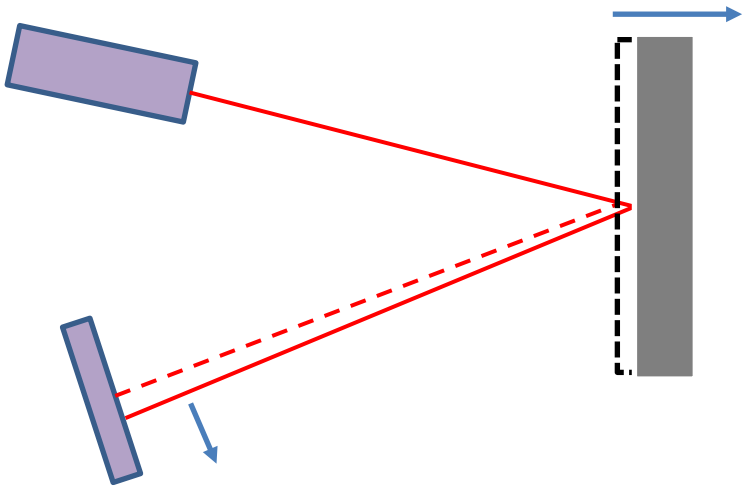

Motivation

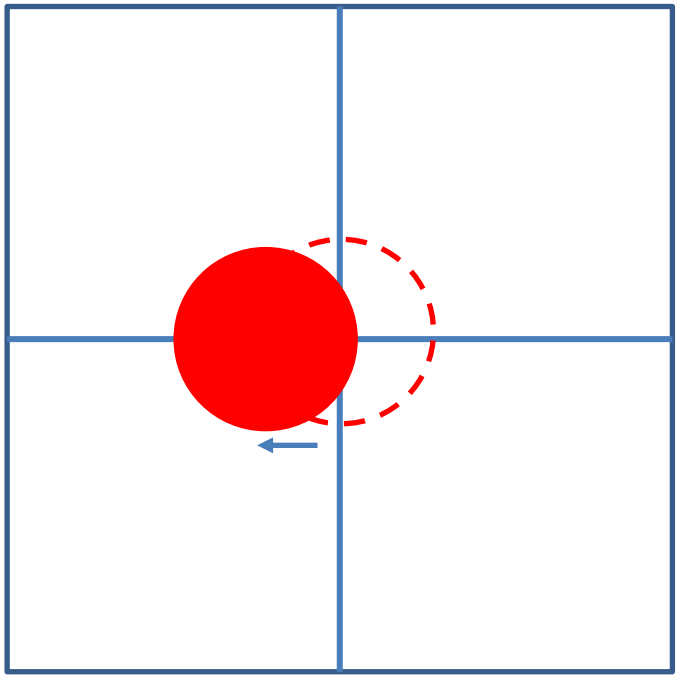

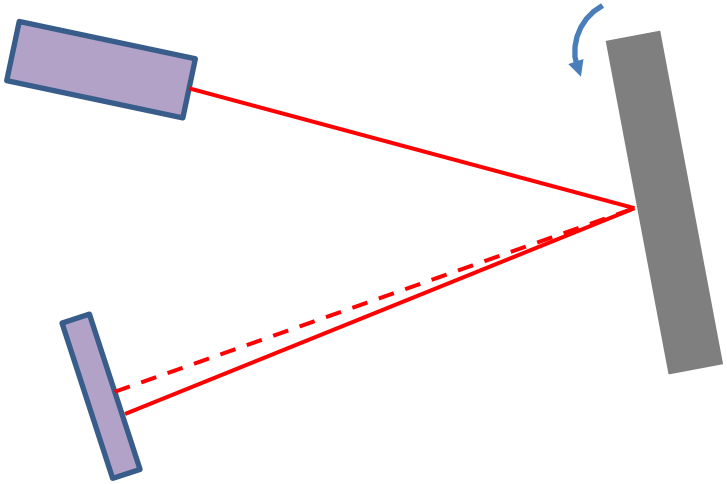

Tilt sensor using FMZI

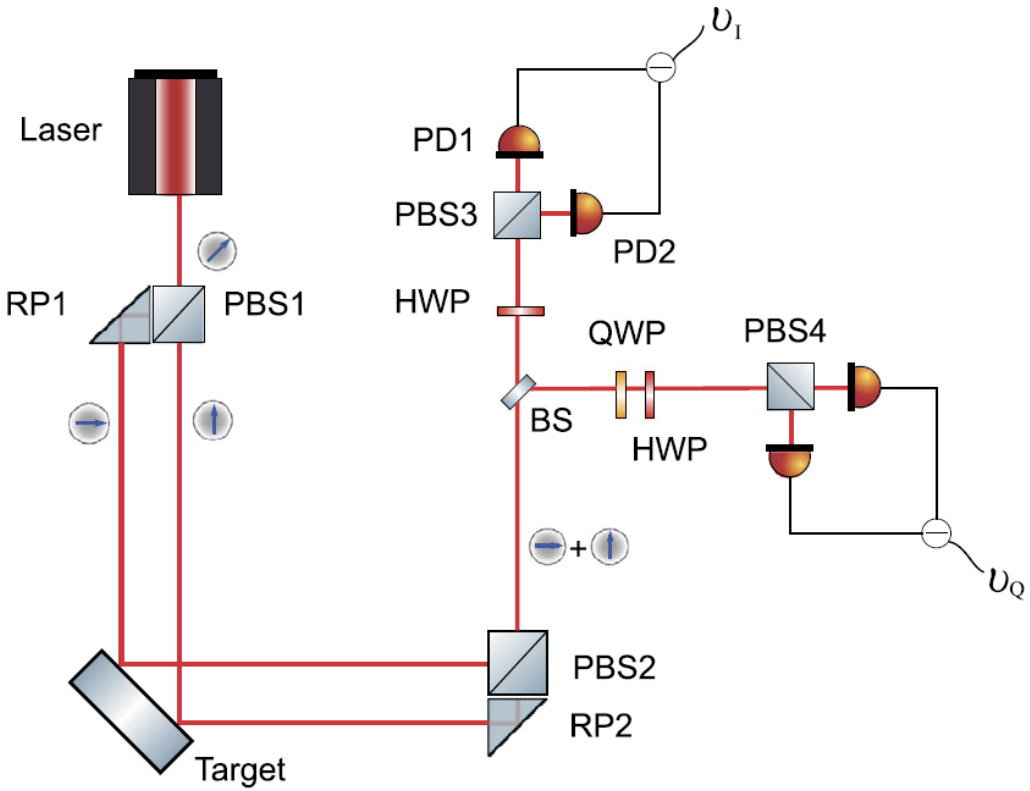

High precision tilt sensor using a folded Mach-Zehnder geometry I/Q-interferometer

K. Kokeyamaetal./PhysicsLettersA382(2018)1950–1955

Homodyne I/Q demodulator

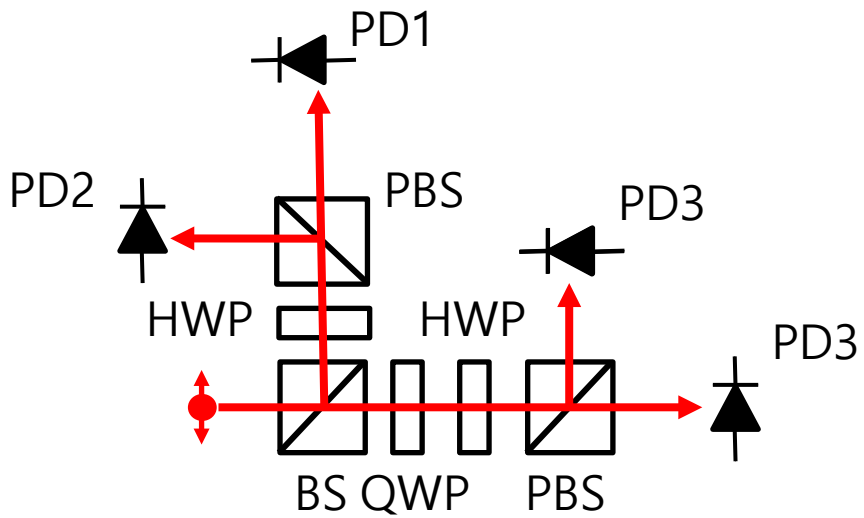

$$\mathrm{I} = v_{\mathrm{PD1}} - v_{\mathrm{PD2}} = R\left|E_{\mathrm{S}}\right|\left|E_{\mathrm{R}}\right|\cos\Delta\phi$$

$$\mathrm{Q} = v_{\mathrm{PD3}} - v_{\mathrm{PD4}} = R\left|E_{\mathrm{S}}\right|\left|E_{\mathrm{R}}\right|\sin\Delta\phi$$

$$\frac{\mathrm{Q}}{\mathrm{I}} = \tan\Delta\phi = \tan(\phi_{\mathrm{S}} - \phi_{\mathrm{R}})$$

$$\sqrt{\mathrm{Q}^2 + \mathrm{I}^2} = R\left|E_{\mathrm{S}}\right|\left|E_{\mathrm{R}}\right|$$

Simultaneous measurement of phase and amplitude

Maintain optimum sensitivity regardless of phase

Tilt sensor using FMZI

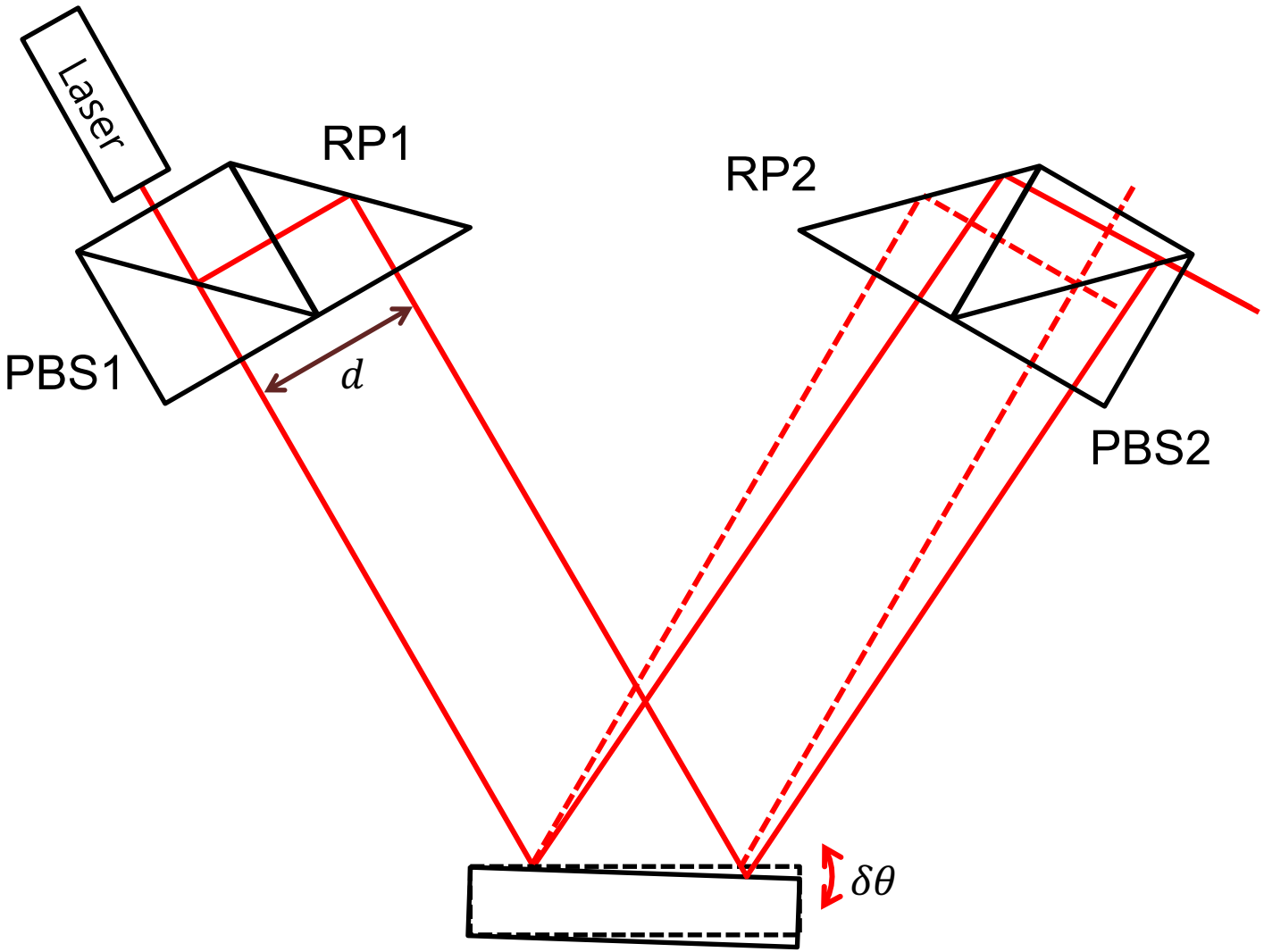

Tilt sensor using FMZI

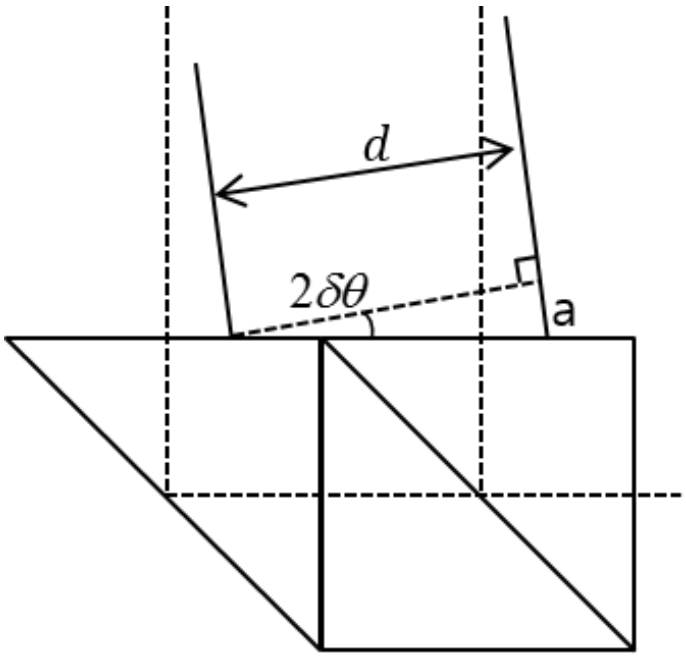

$$2d\delta\theta = \frac{\lambda}{2\pi}\Delta\phi$$ (When theta is small)

Stability of tilt sensor

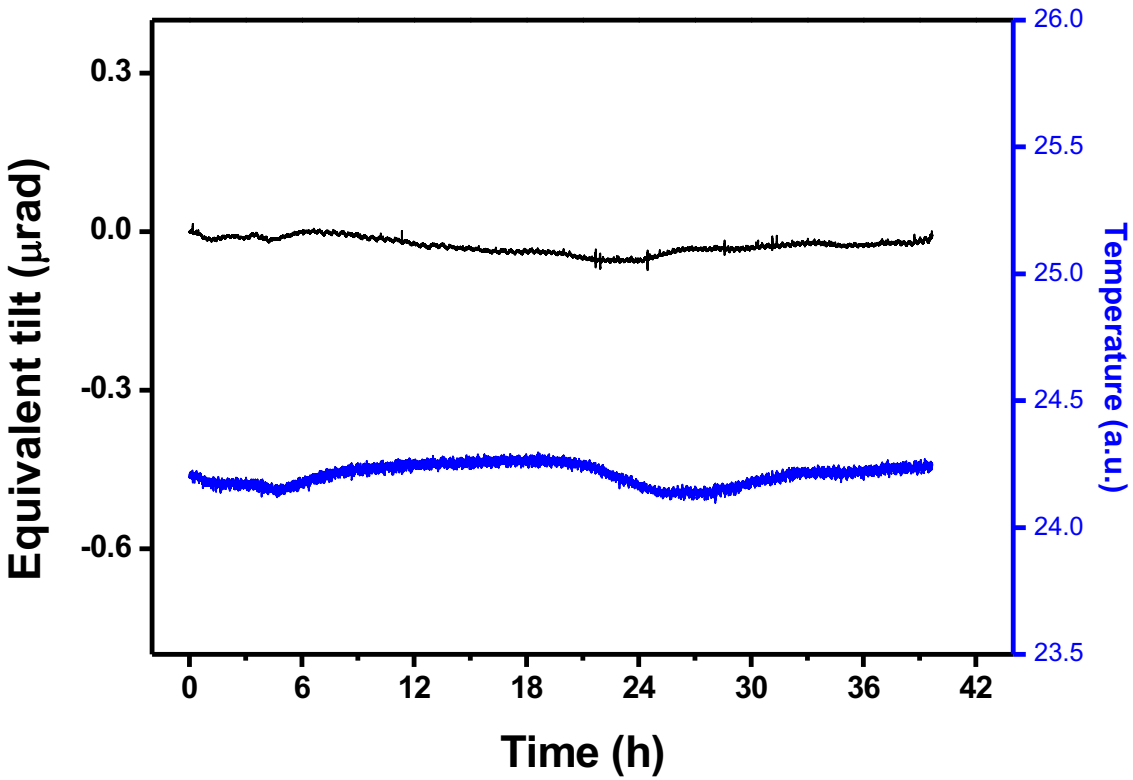

Without mirror

Measurement results in lab environment

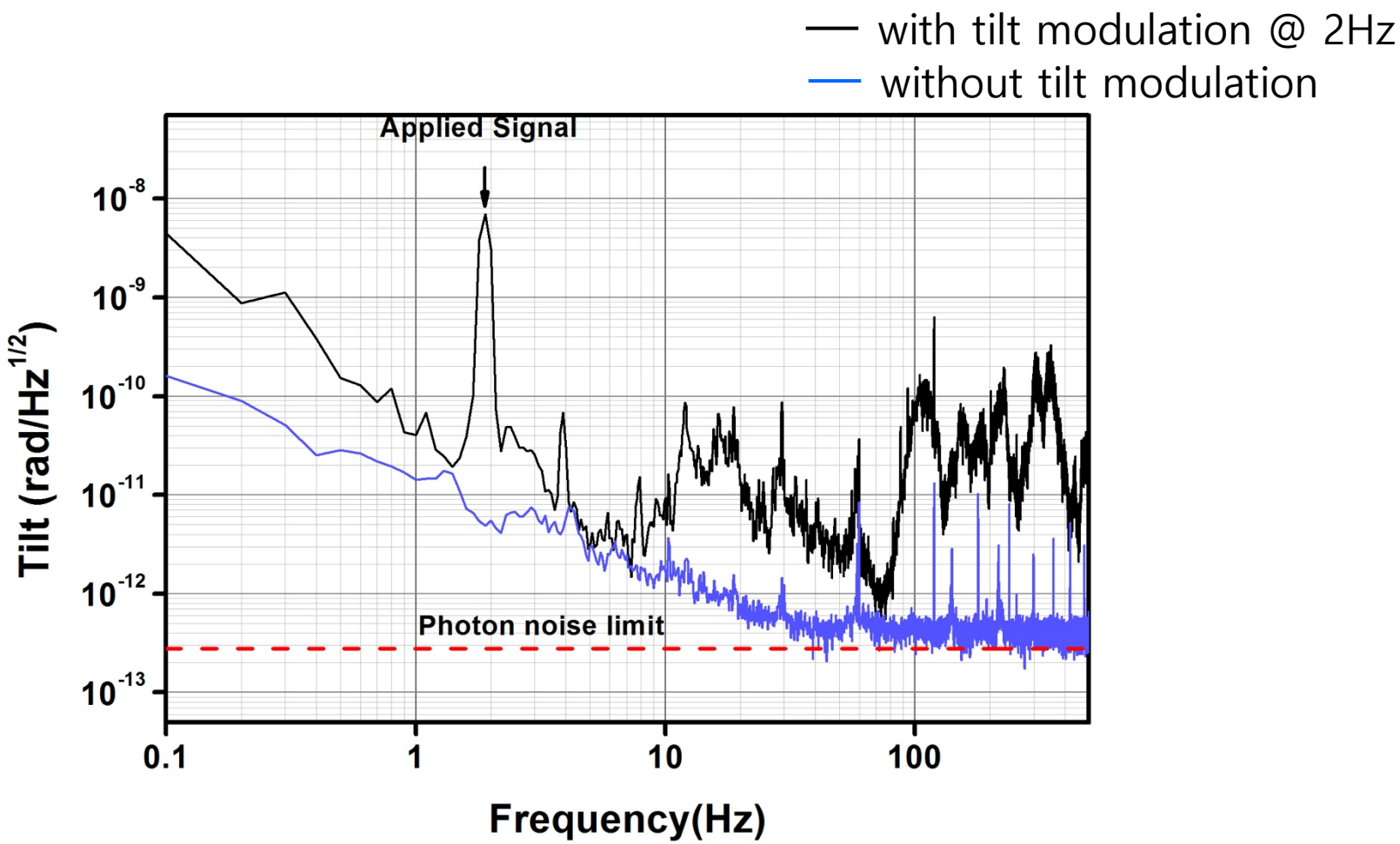

J.G. Park and K. Cho, Vol. 55, No. 13 / /Applied Optics

Dynamic range of the tilt sensor

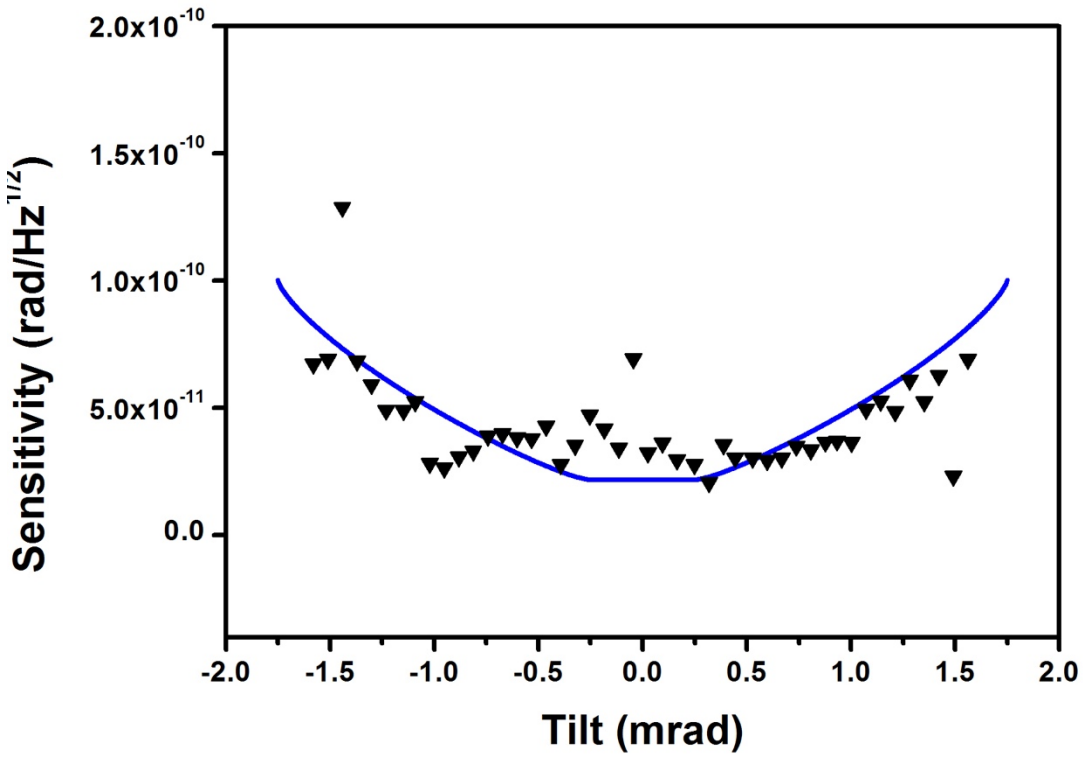

Distance between sensor and target mirror = 1m

J.G. Park and K. Cho, Vol. 55, No. 13 / /Applied Optics

2. Installation of the tilt sensor on KAGRA MCe

Two-axis interferometric tilt sensor

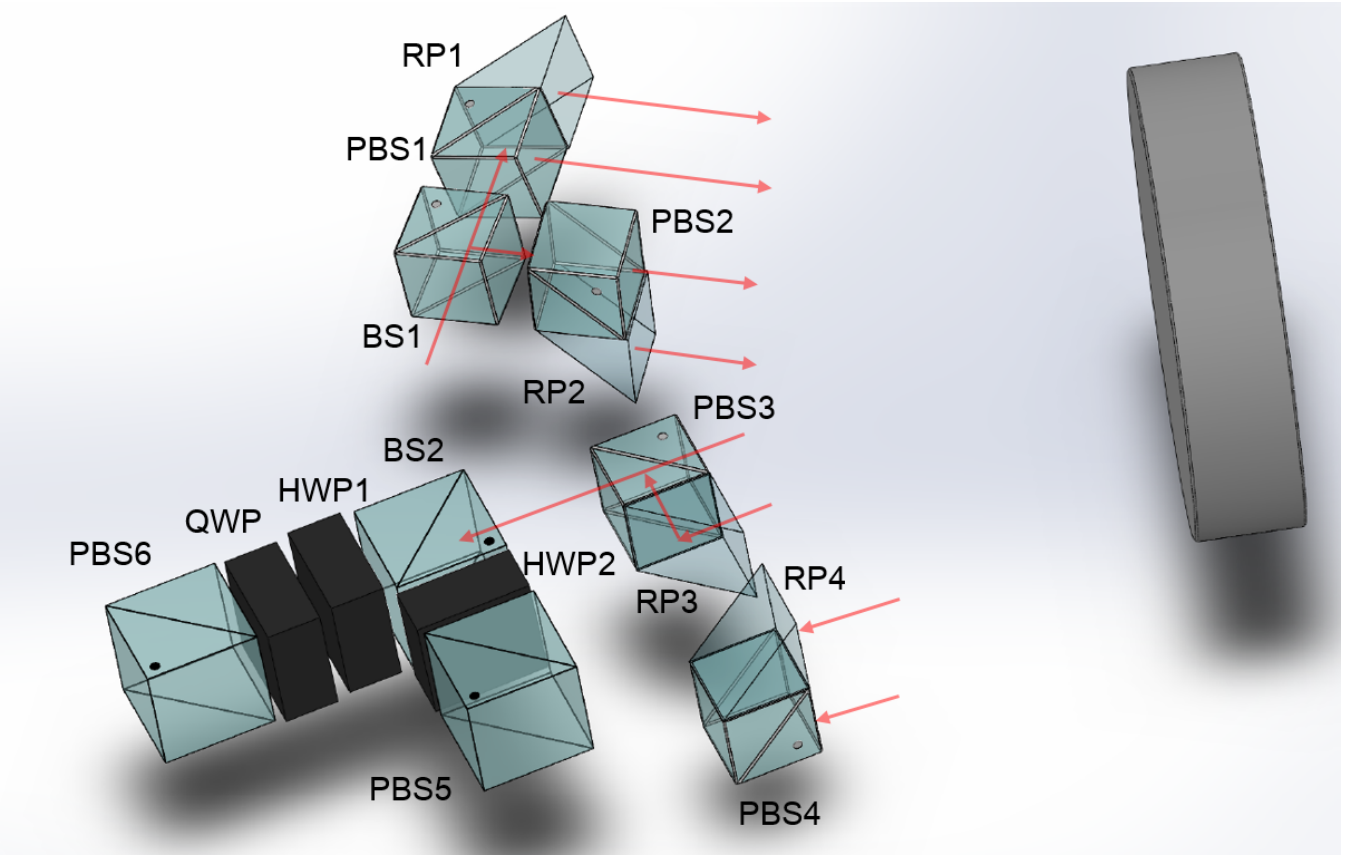

MCe mirror and suspension system

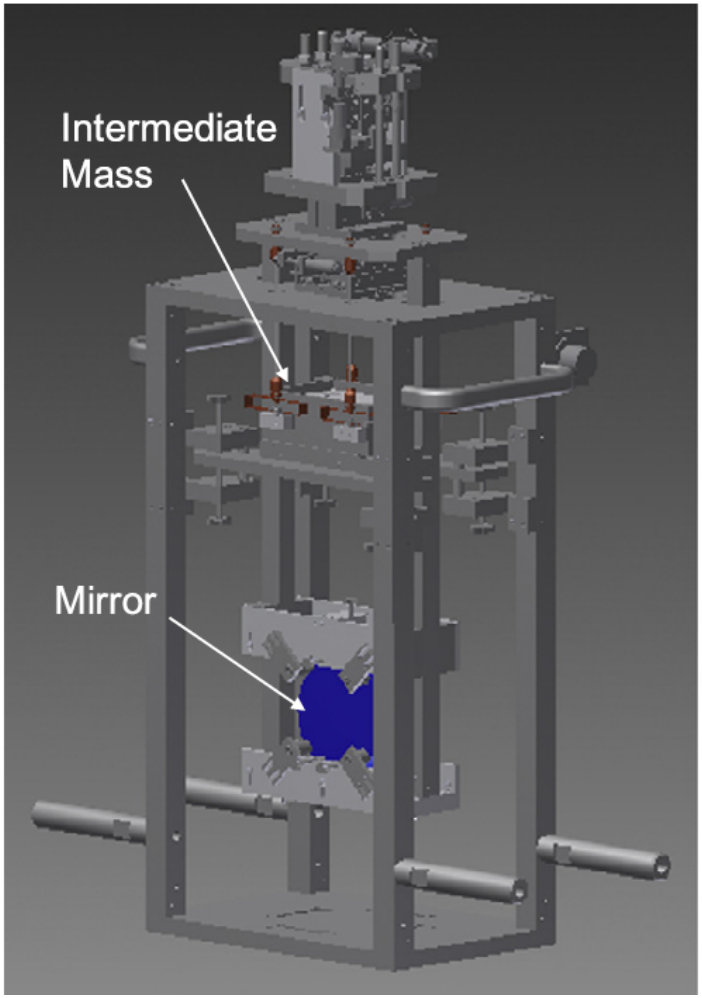

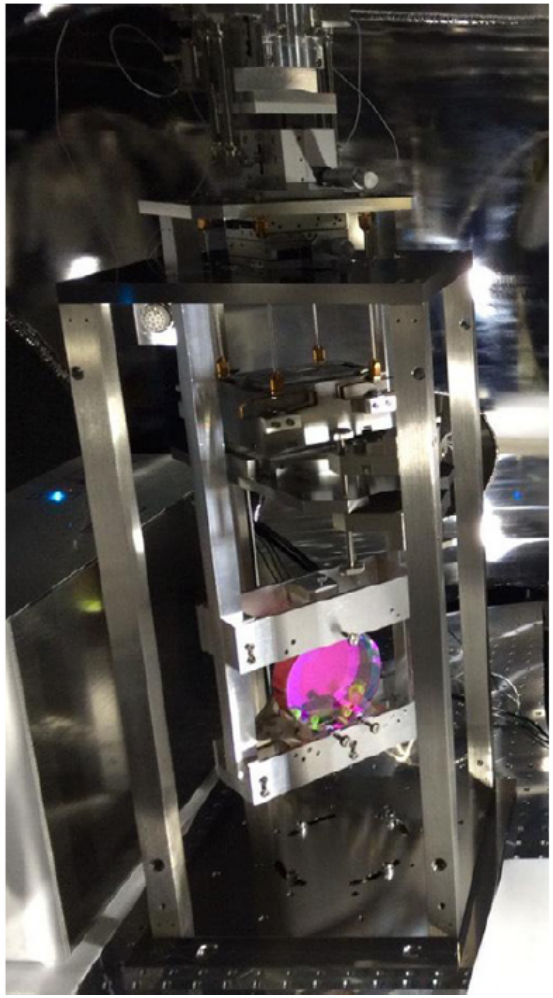

Experimental setup of the input and detection ports of tilt sensor

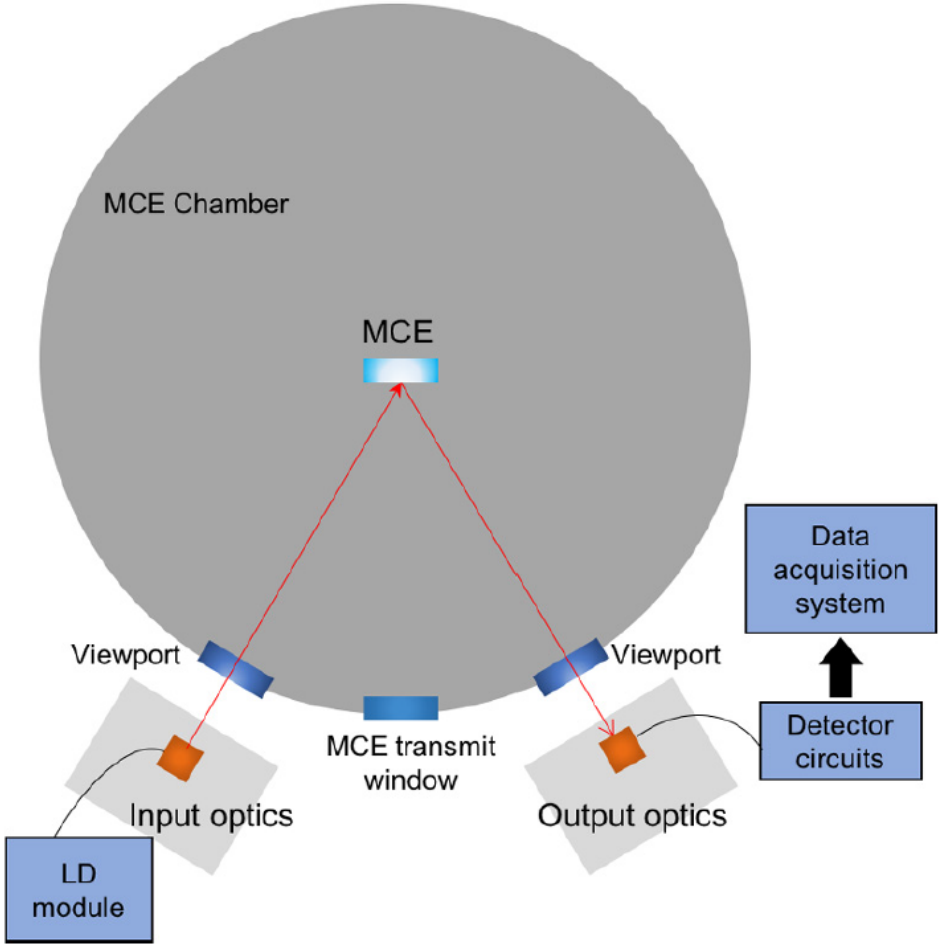

Development history

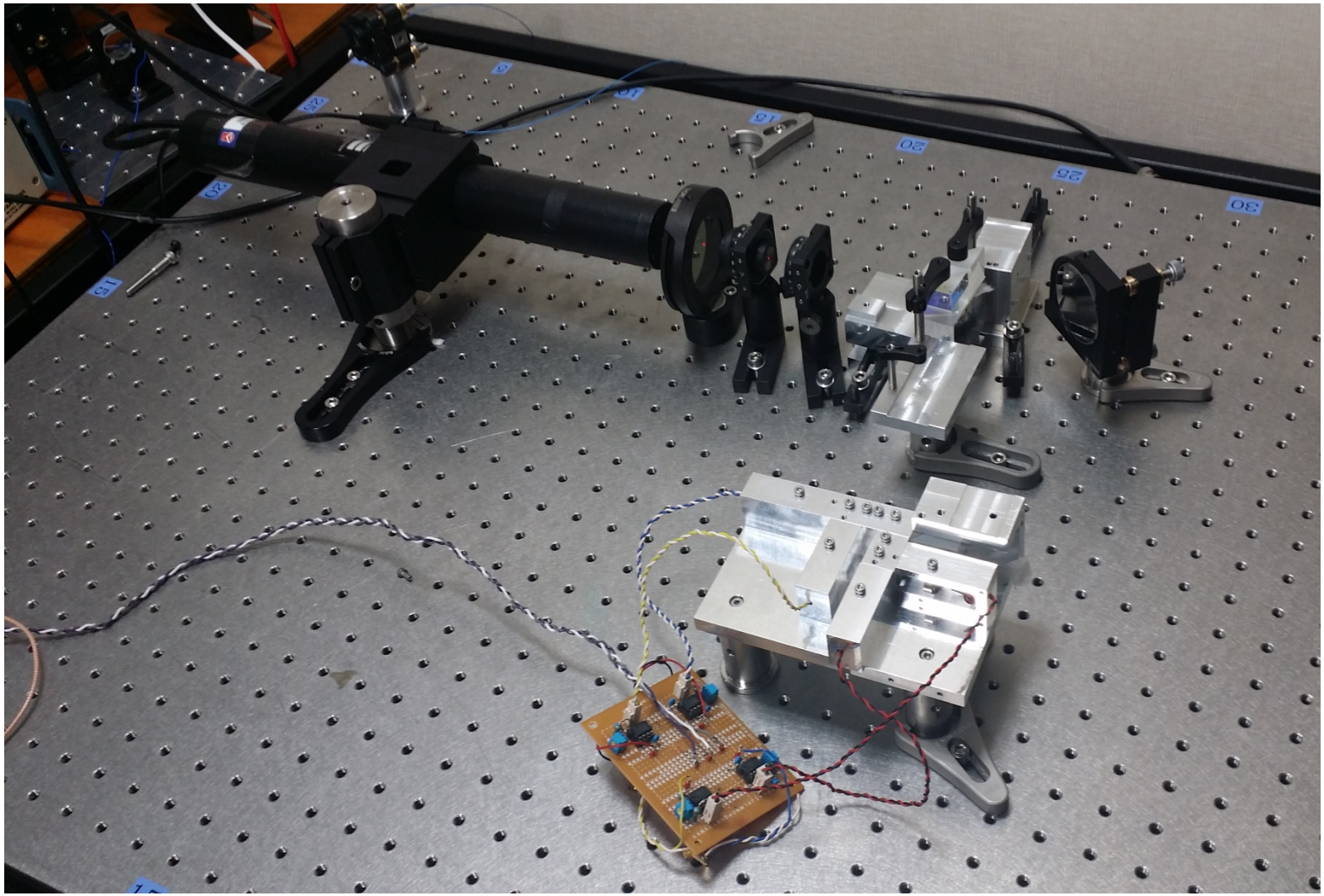

Development history

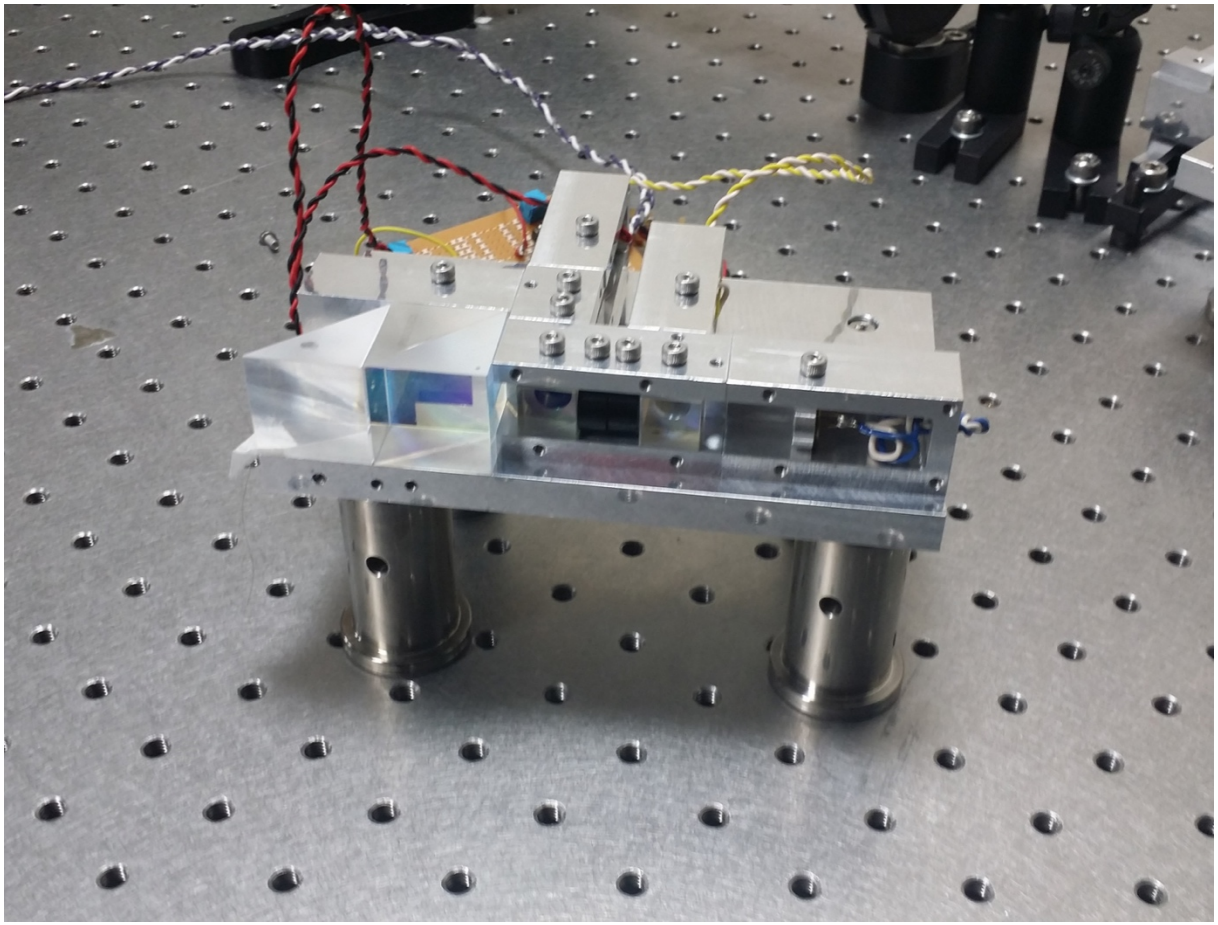

Development history

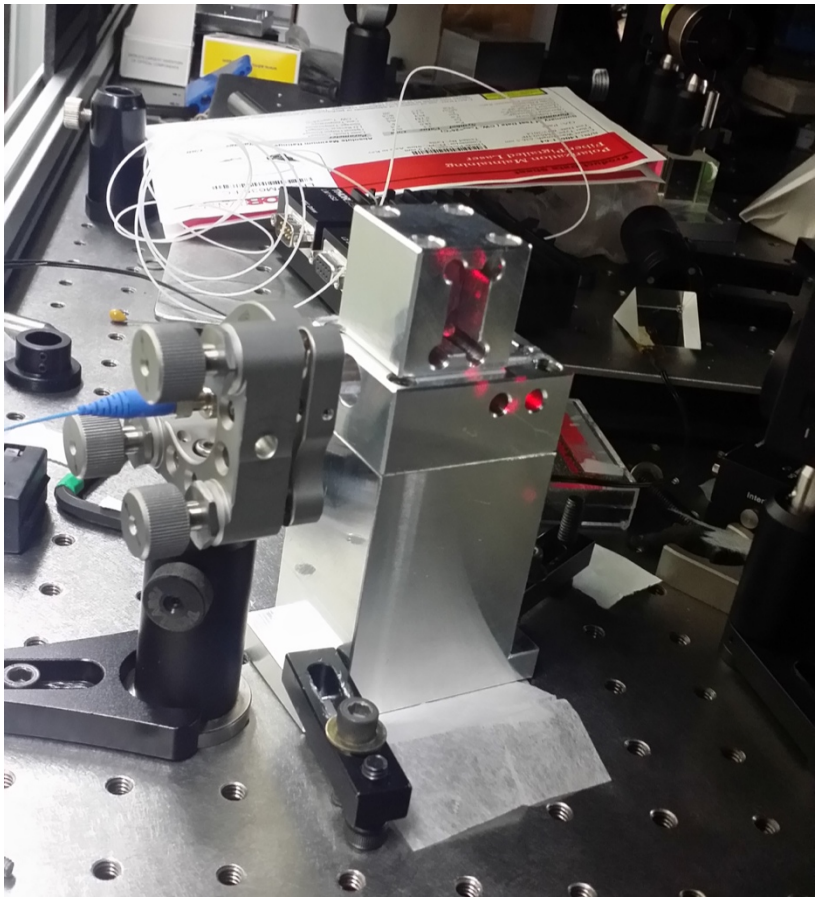

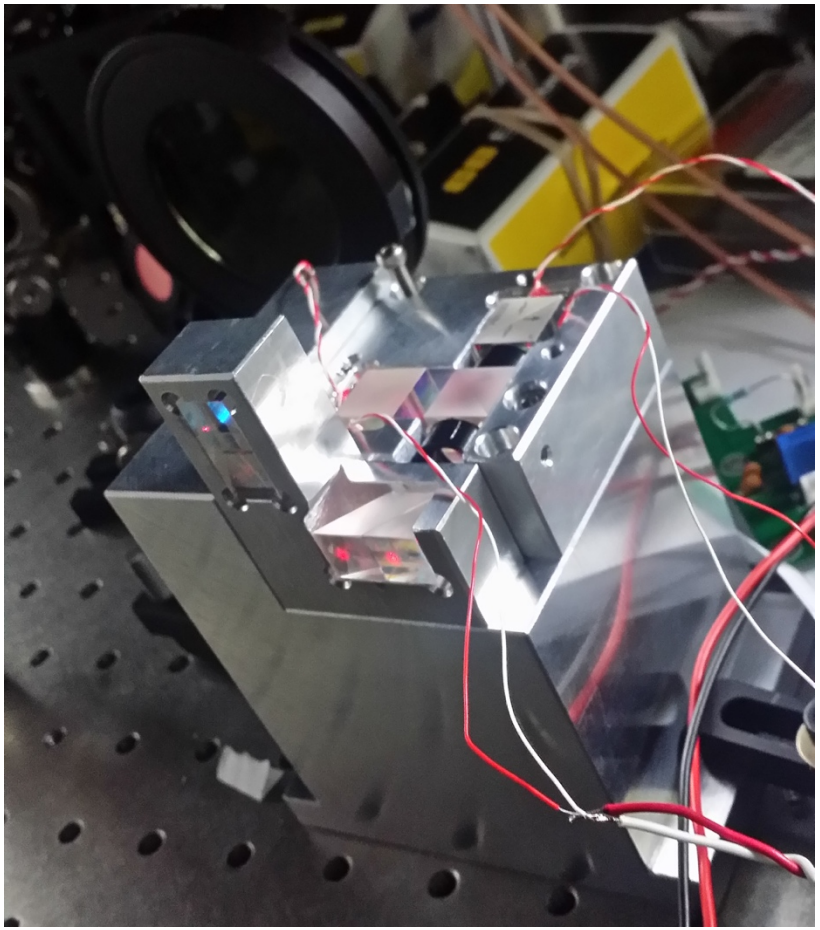

Tilt sensor input optics

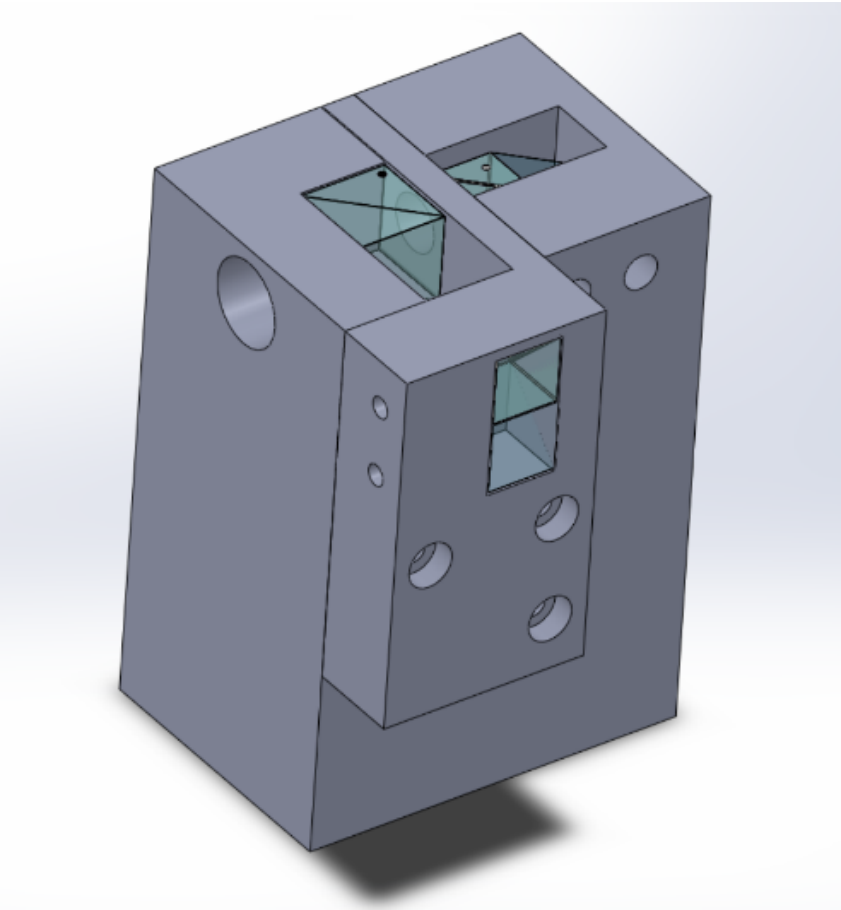

Tilt sensor input optics

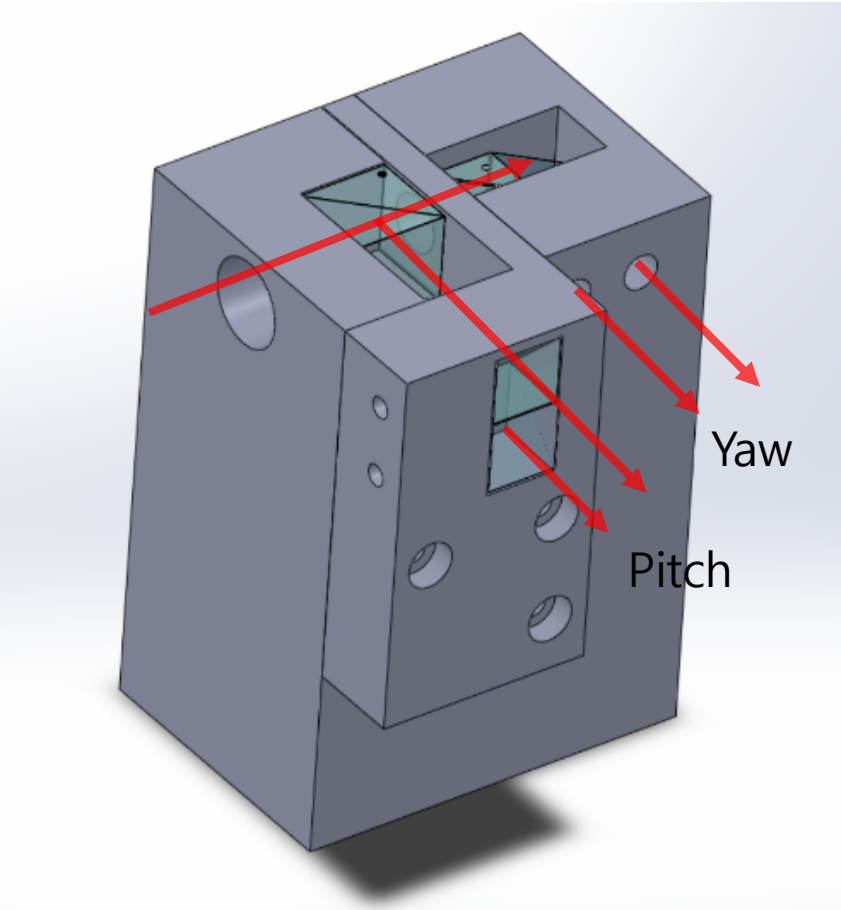

Input arrangement for the tilt sensor

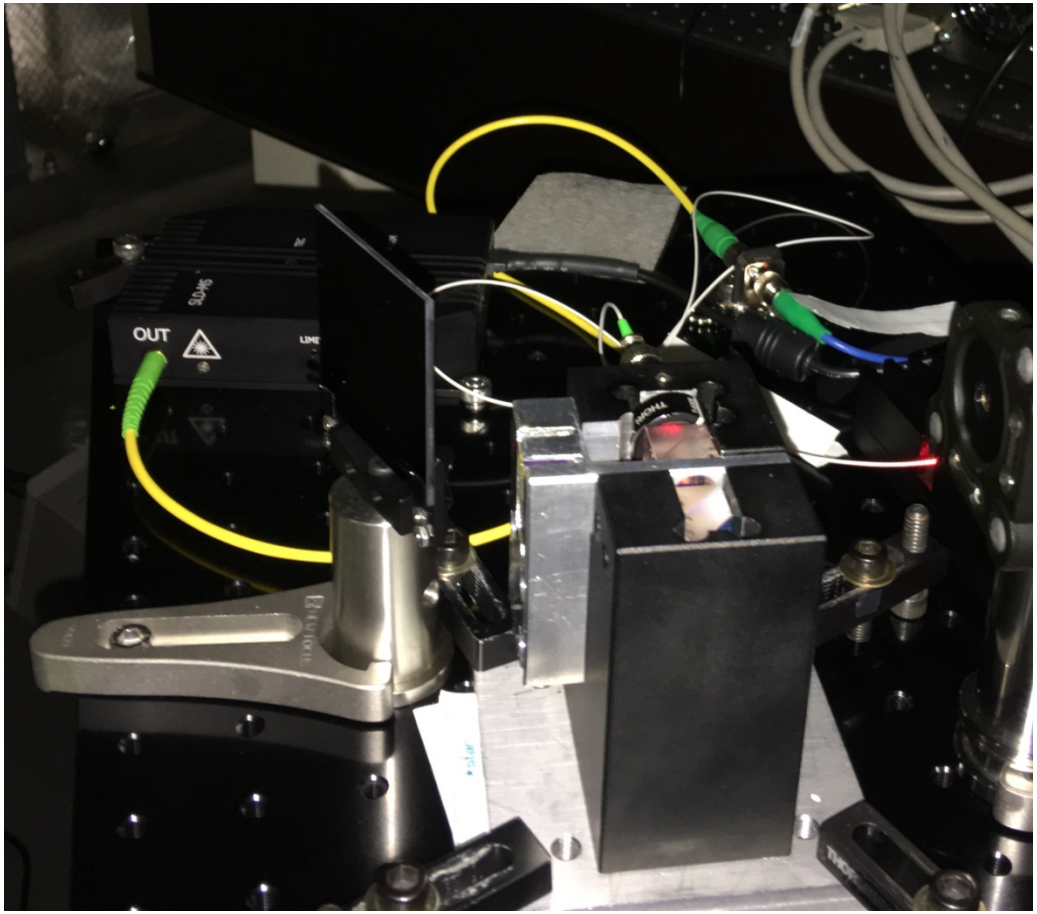

Tilt sensor output optics

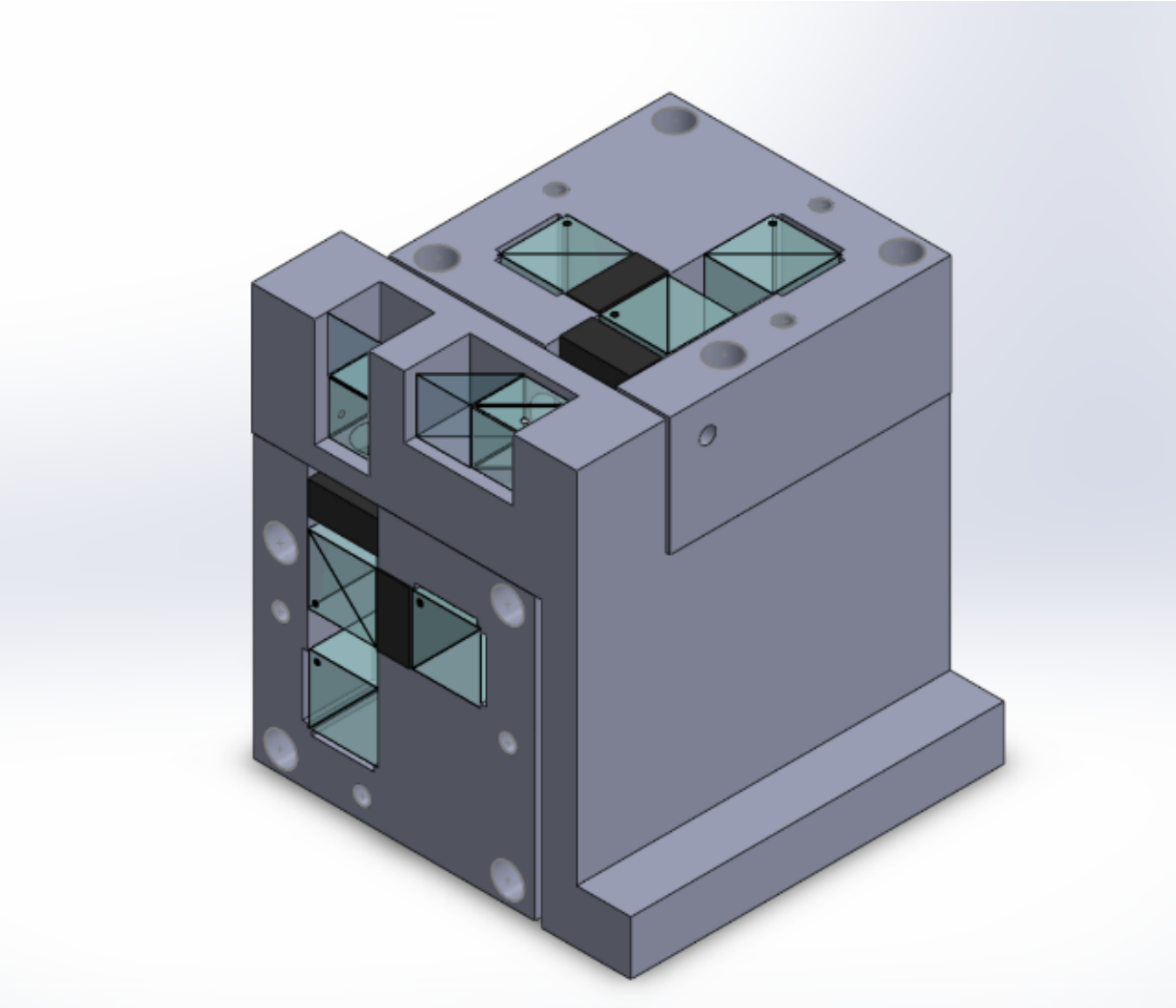

Tilt sensor detector

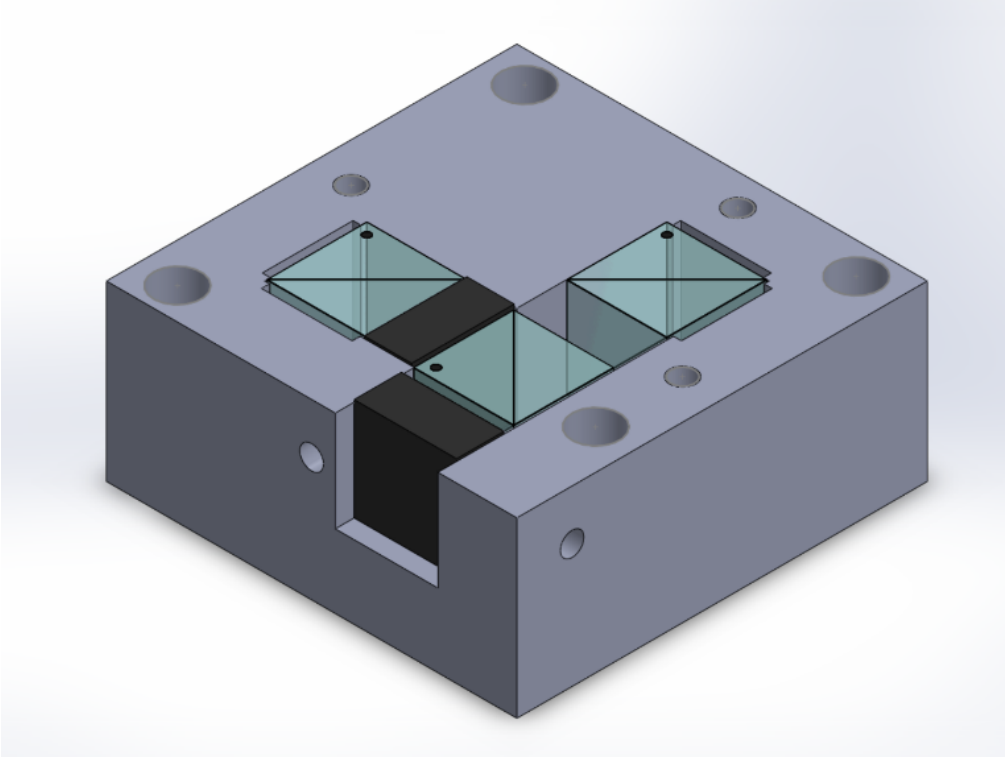

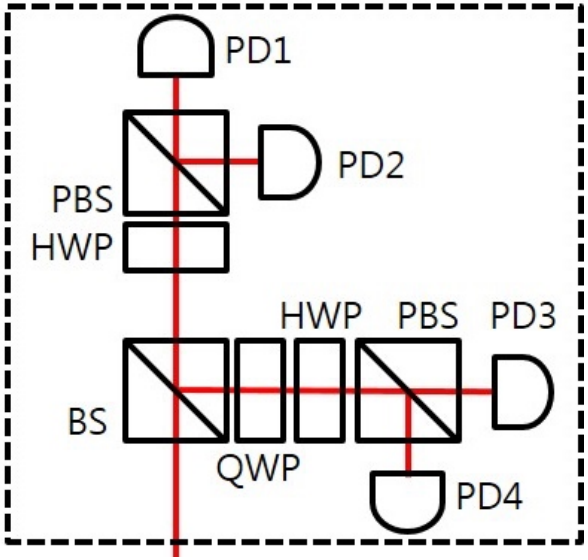

Detector arrangement for the tilt sensor

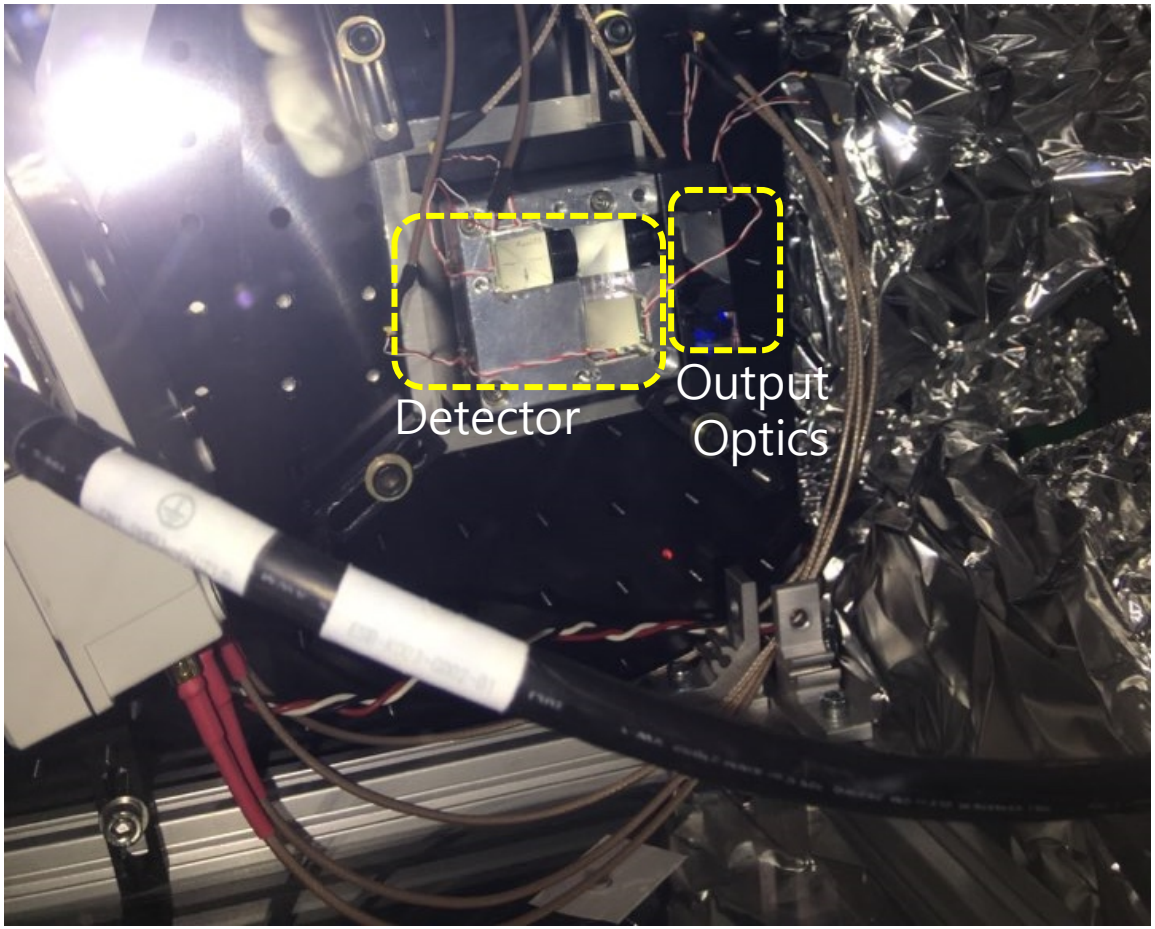

Modified two-axis tilt sensor

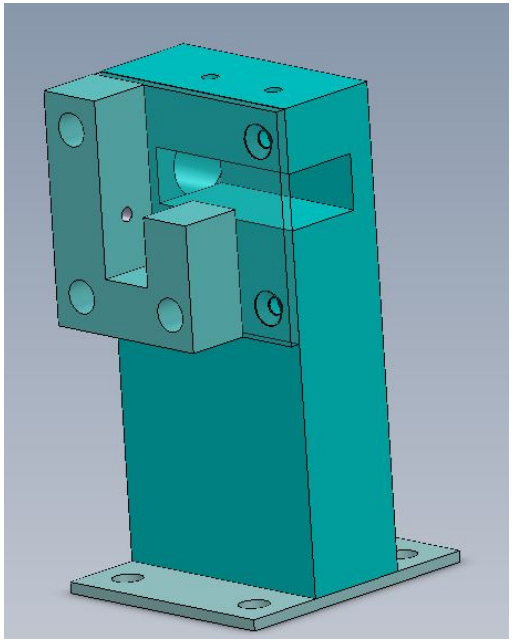

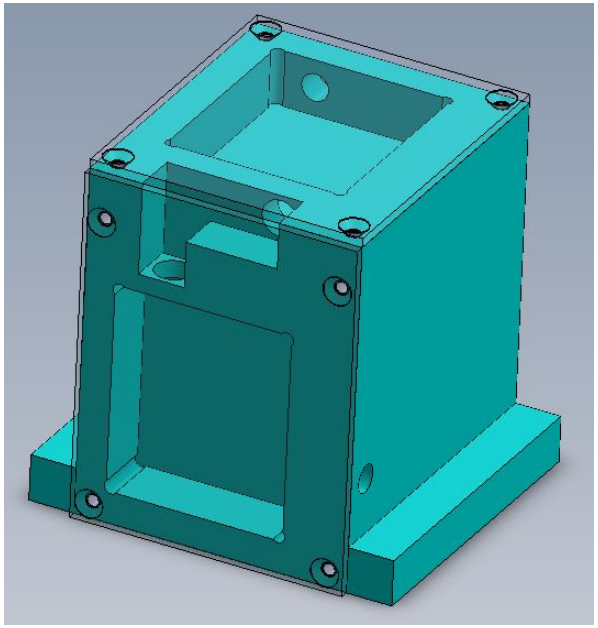

Modified two-axis tilt sensor

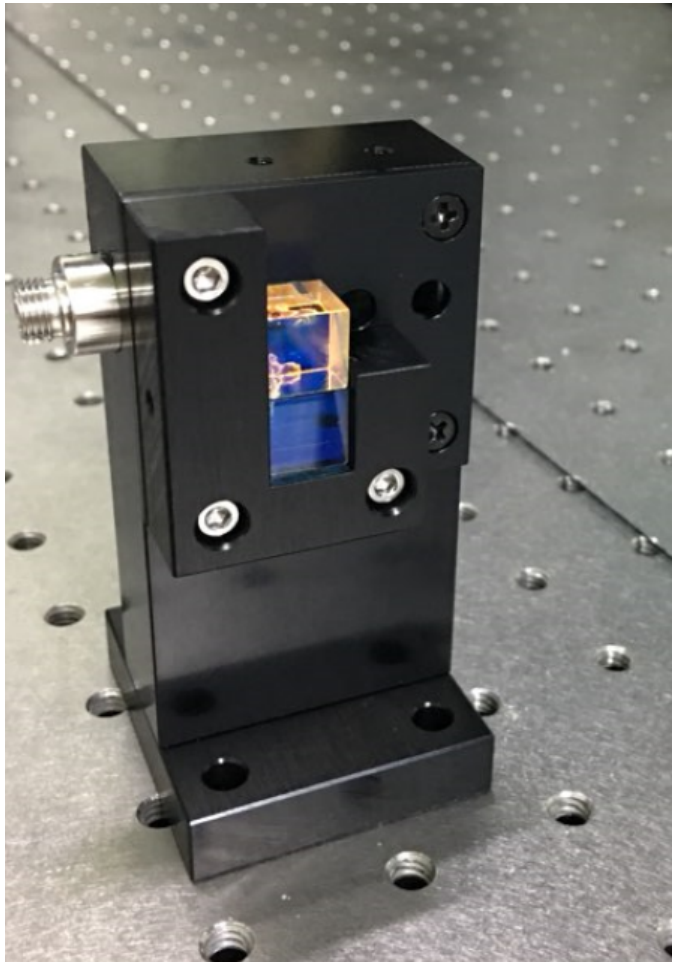

Modified two-axis tilt sensor

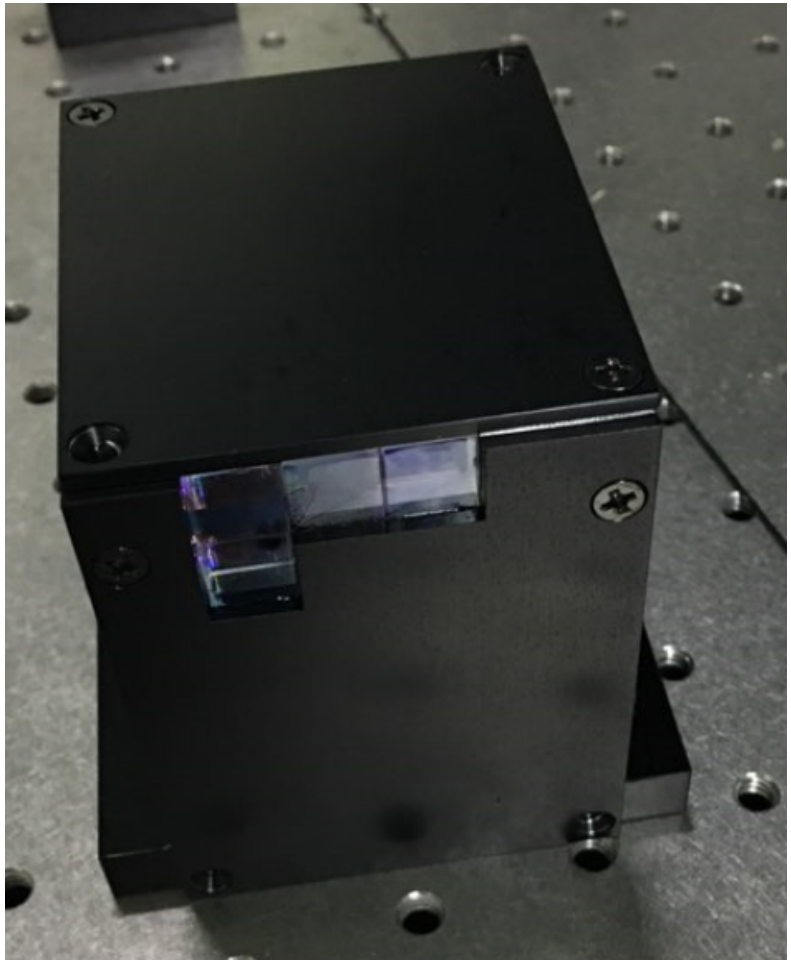

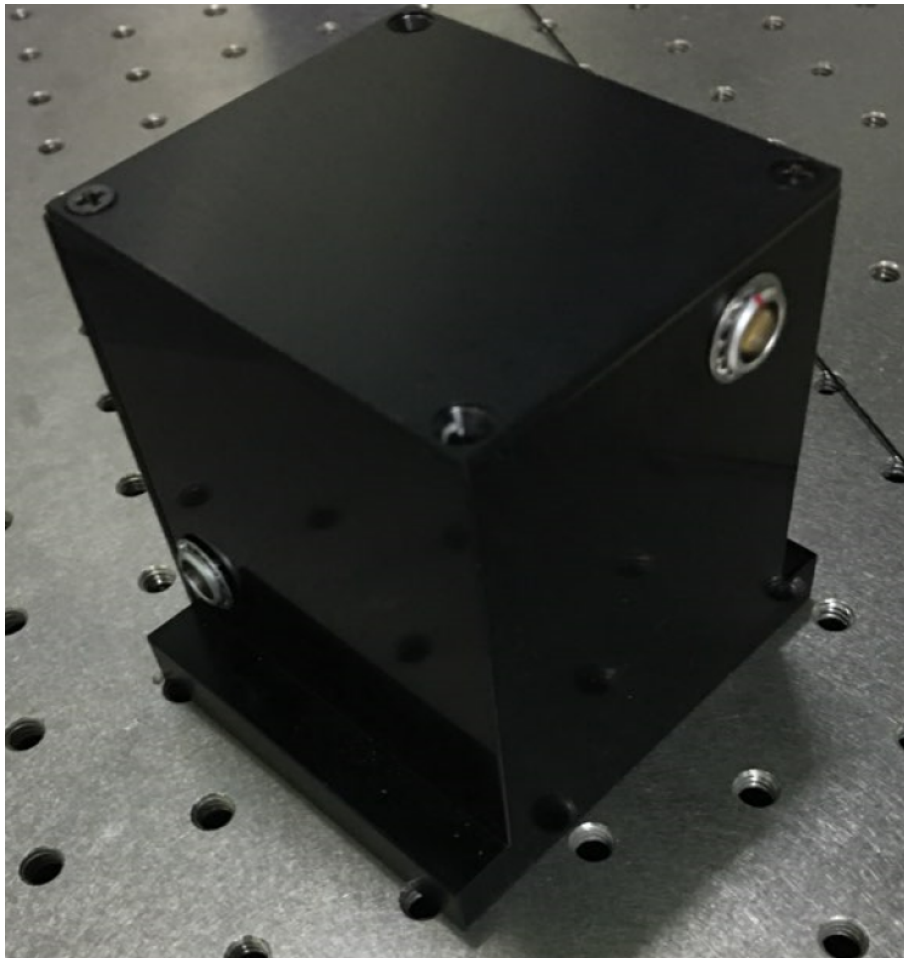

Modified two-axis tilt sensor

Modified two-axis tilt sensor

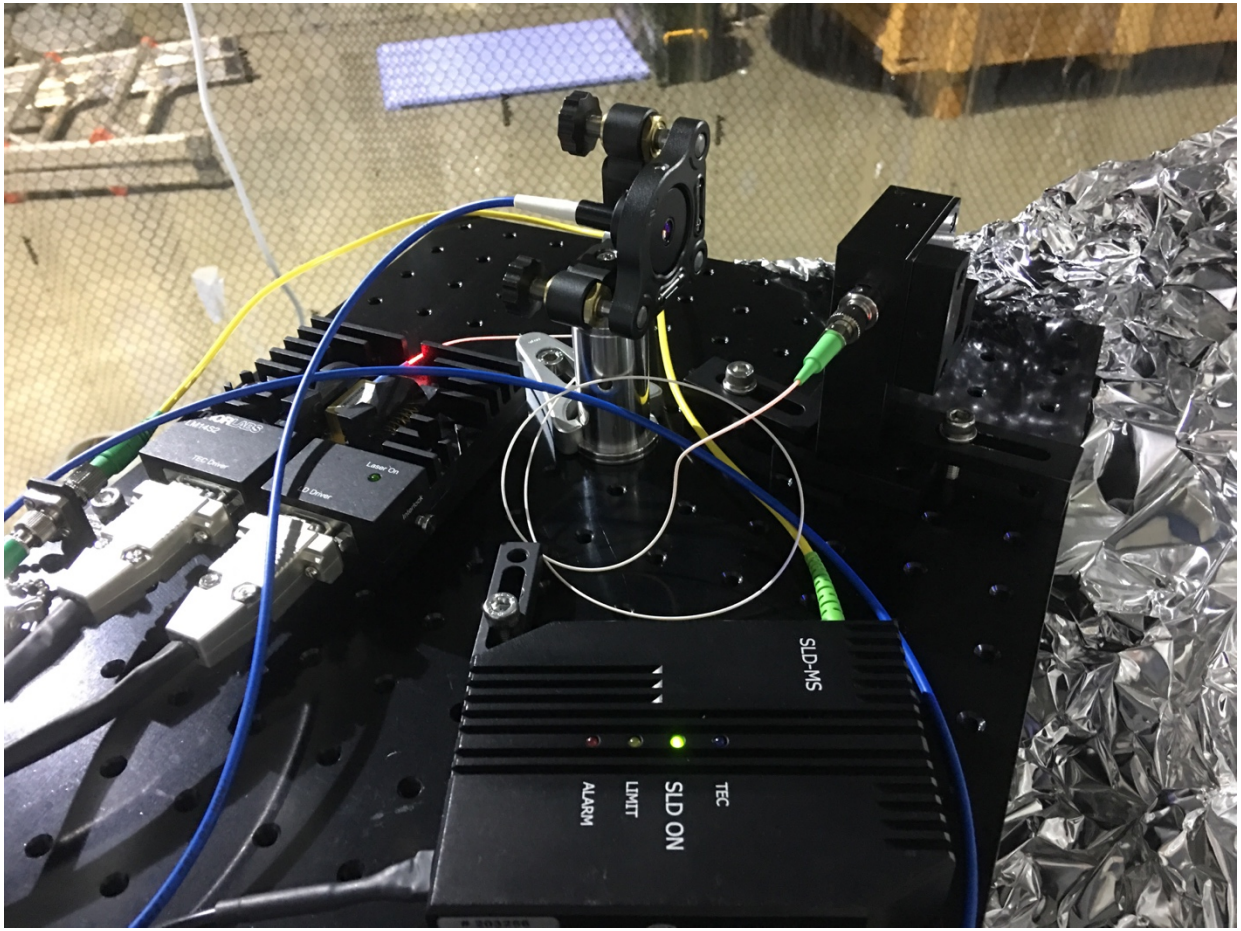

Modified two-axis tilt sensor

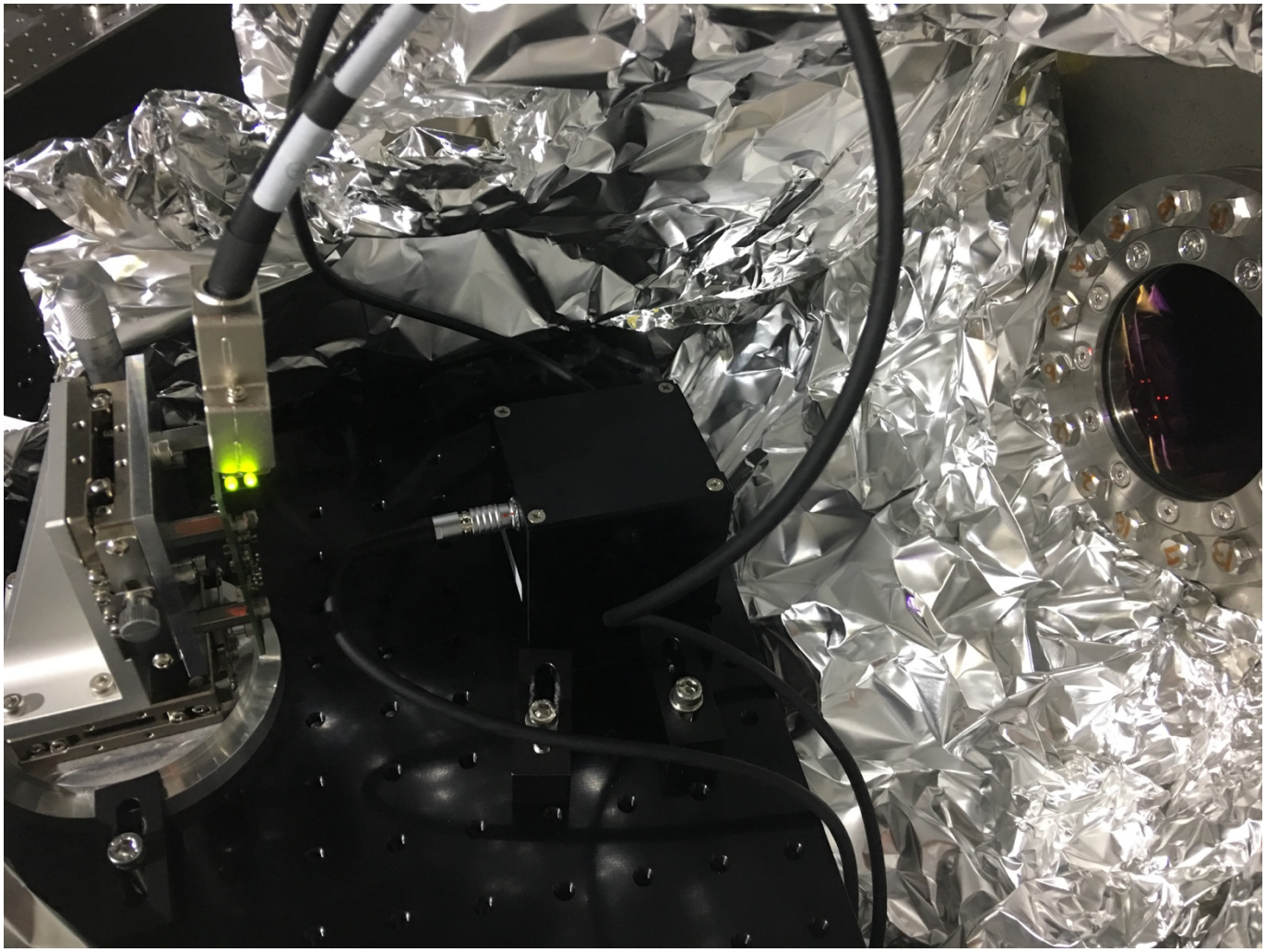

Modified two-axis tilt sensor

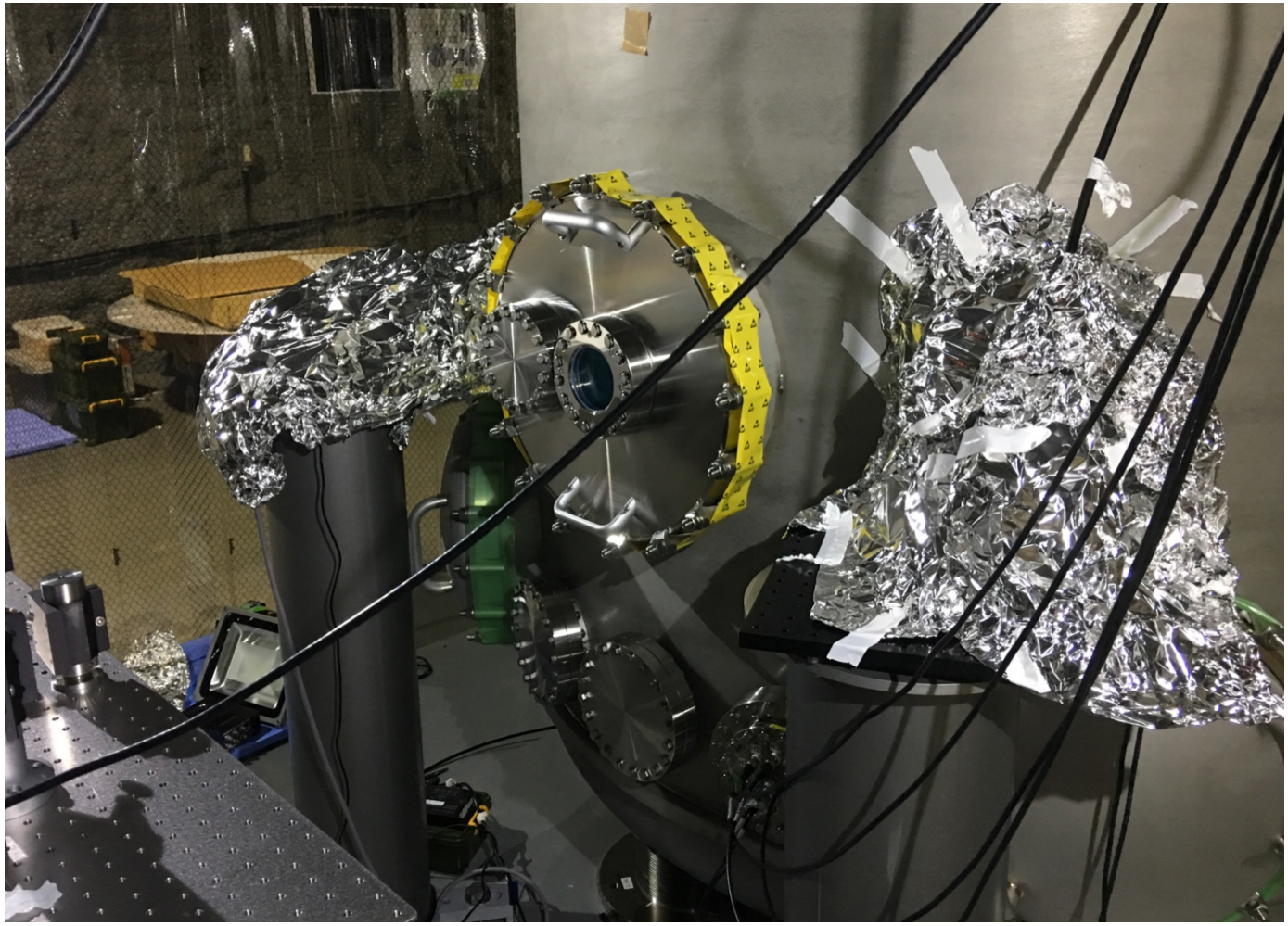

3. Evaluation results

Optical lever calibration by using the tilt sensor

1. Install the tilt sensor
2. Excite the MCE mirror with actuator
3. Measure the excitation angle of the mirror with the tilt sensor
4. Remove the tilt sensor and install the optical lever
5. Apply the same excitation to the MCE mirror
6. Calibrate optical lever signal by using the tilt sensor measurement results.

Excitation test with tilt sensor

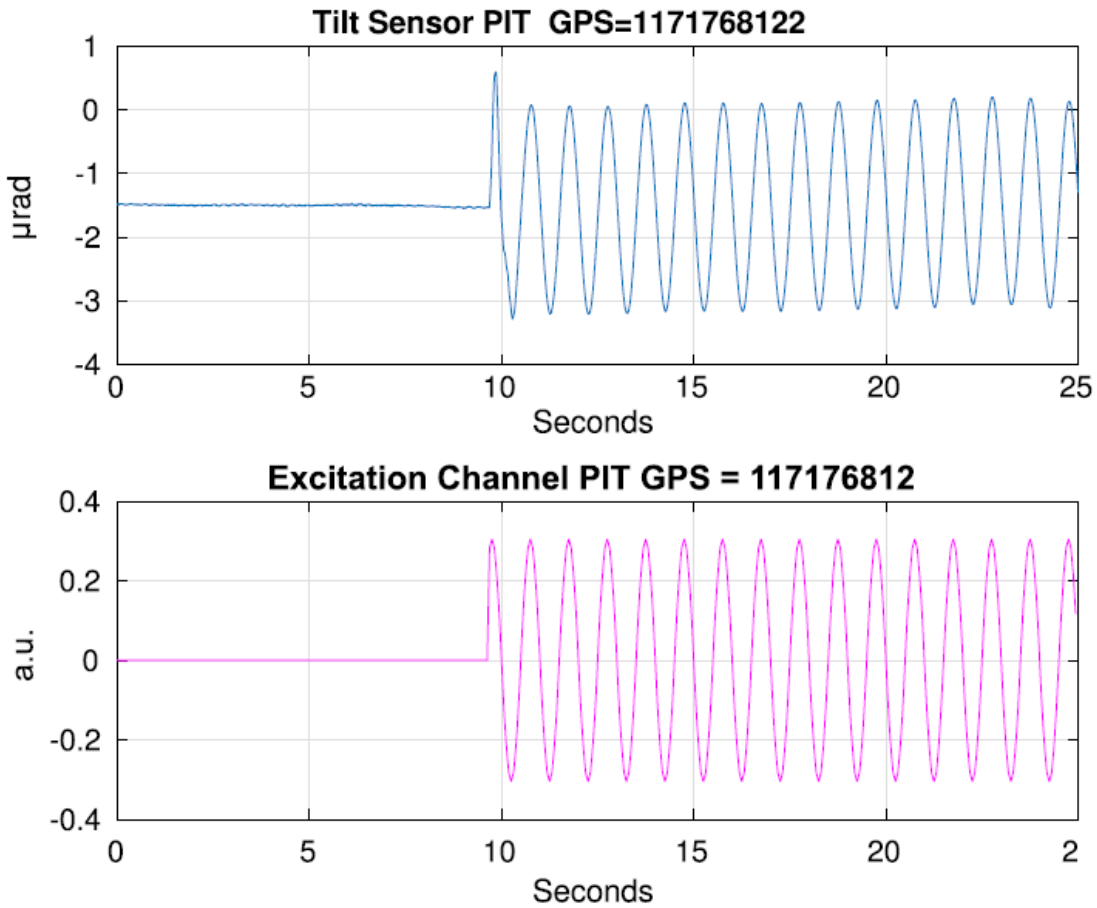

Excitation test with tilt sensor

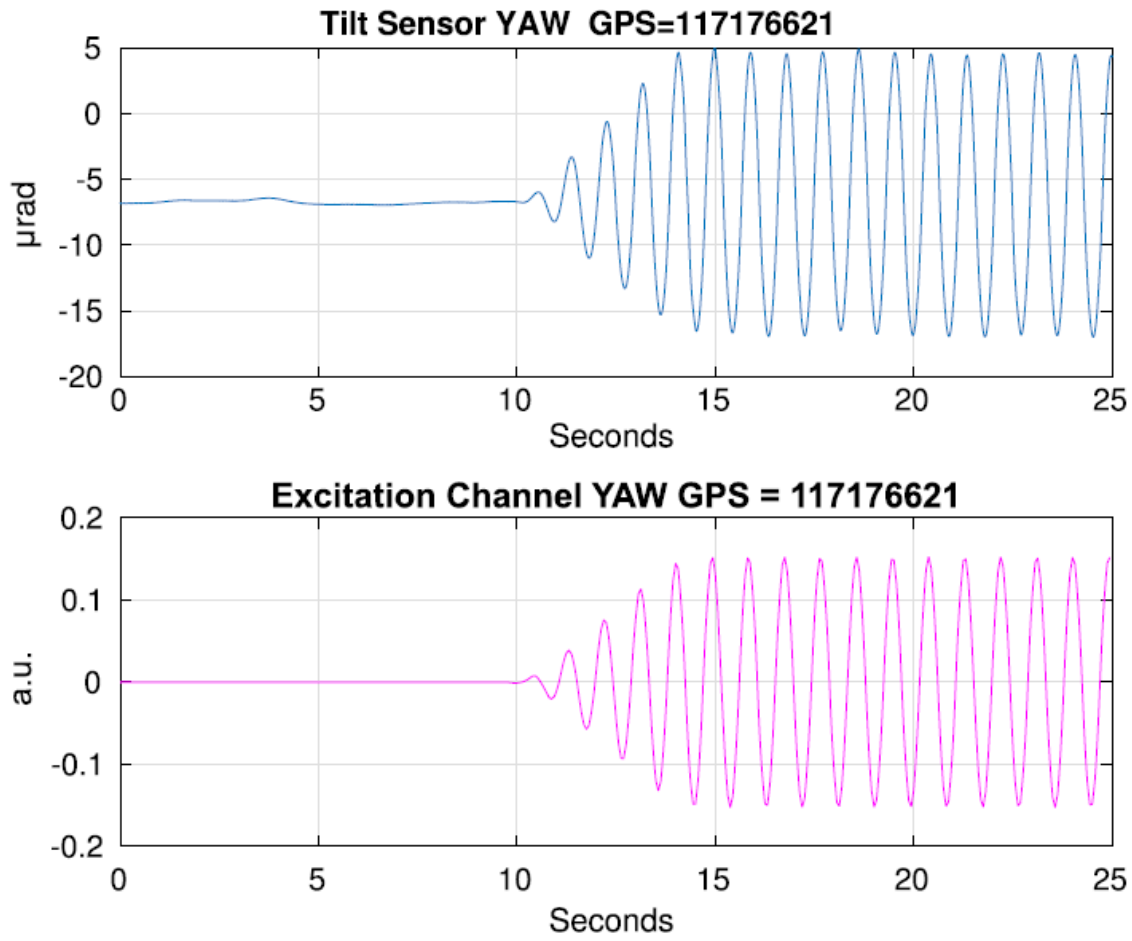

Tilt sensor spectra in various condition(YAW)

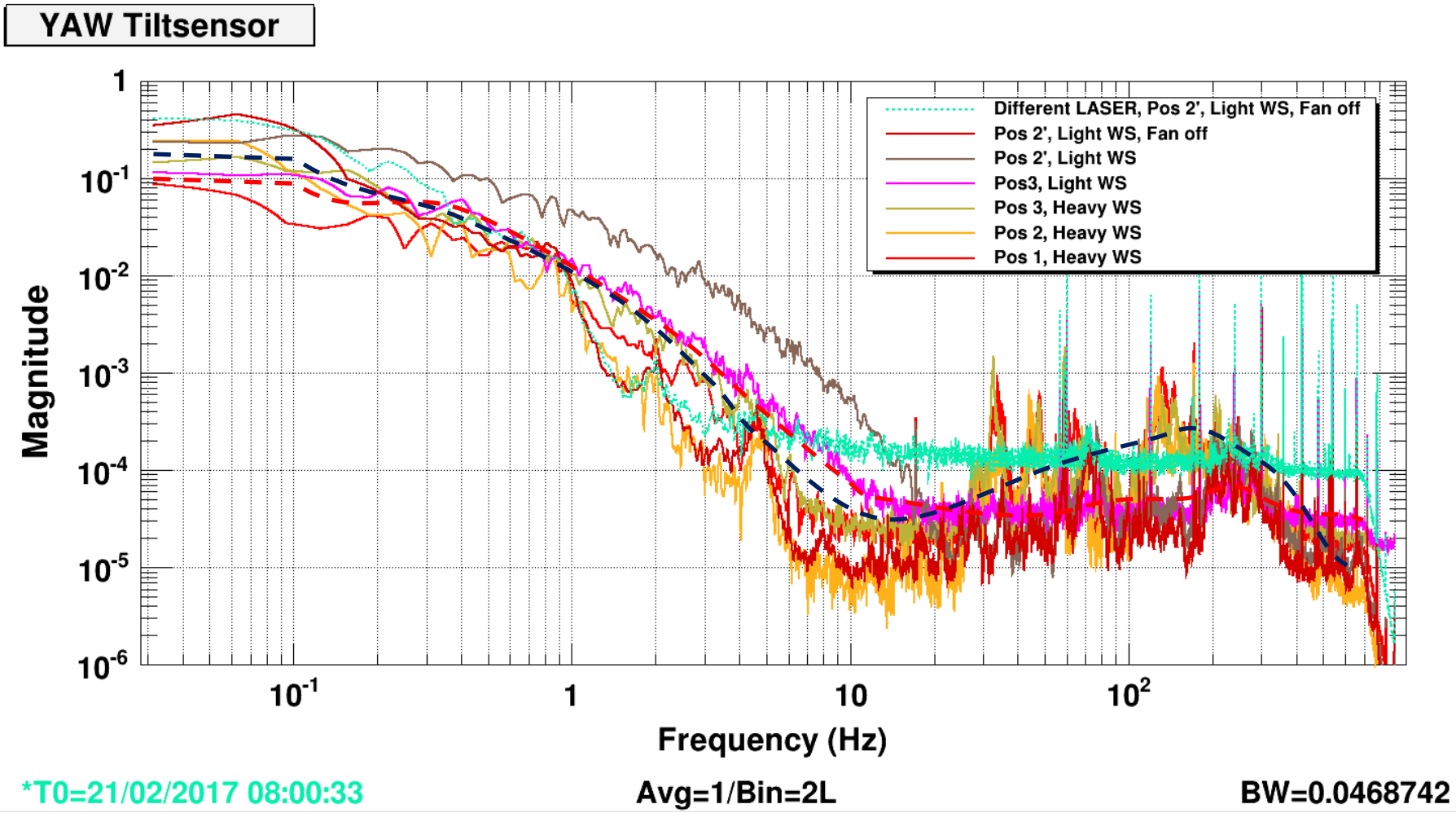

Tilt sensor spectra in various condition(YAW)

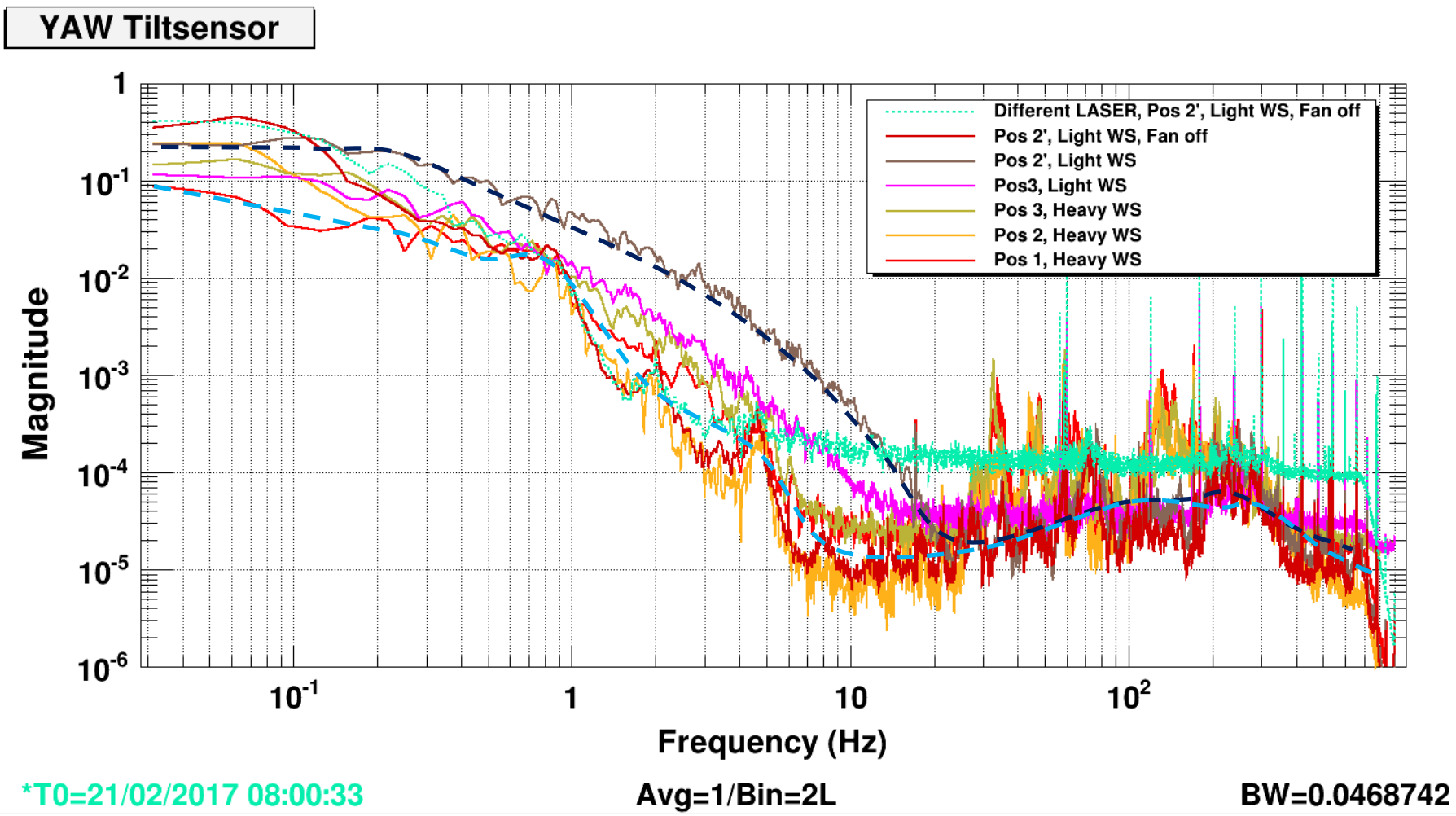

Tilt sensor spectra in various condition(PIT)

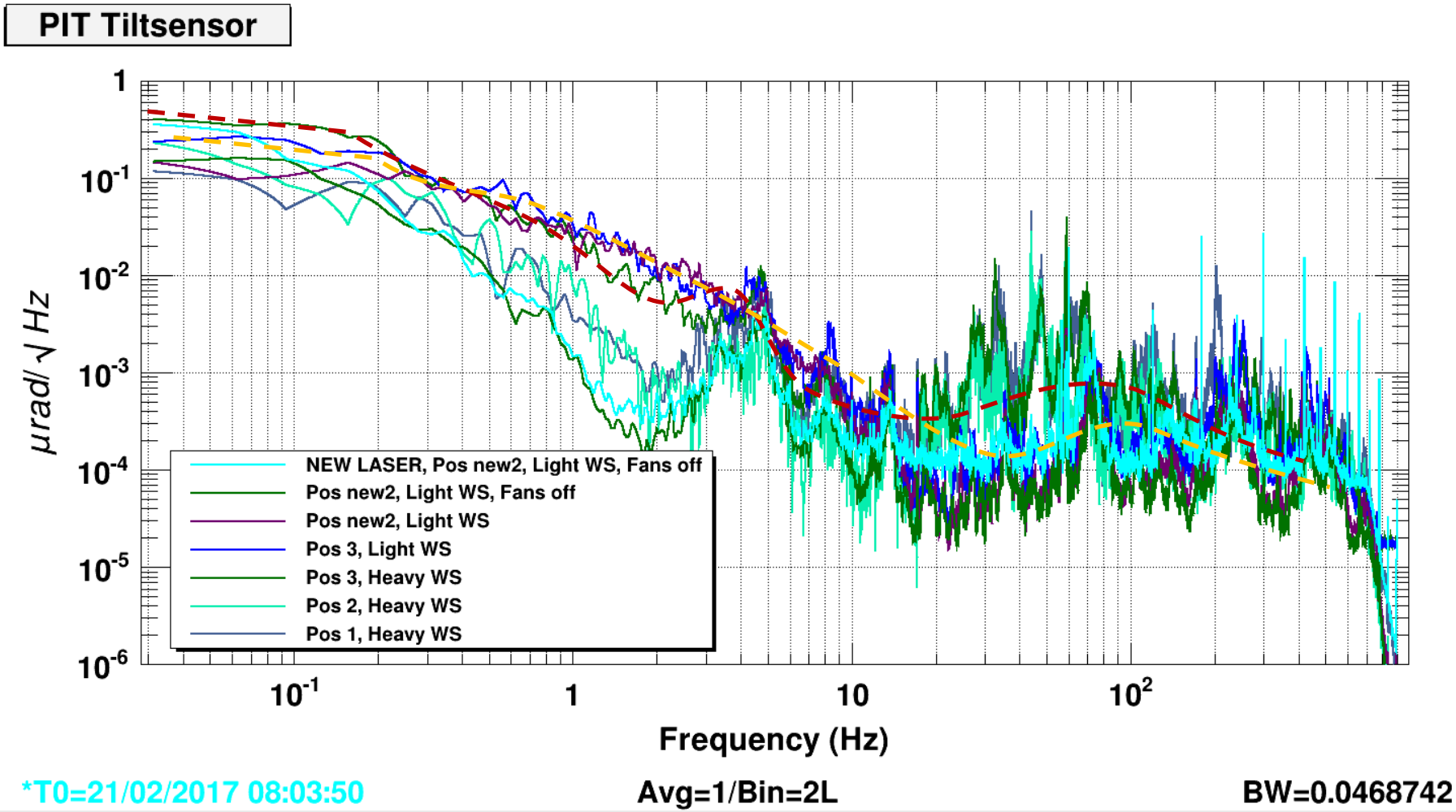

Tilt sensor spectra in various condition(PIT)

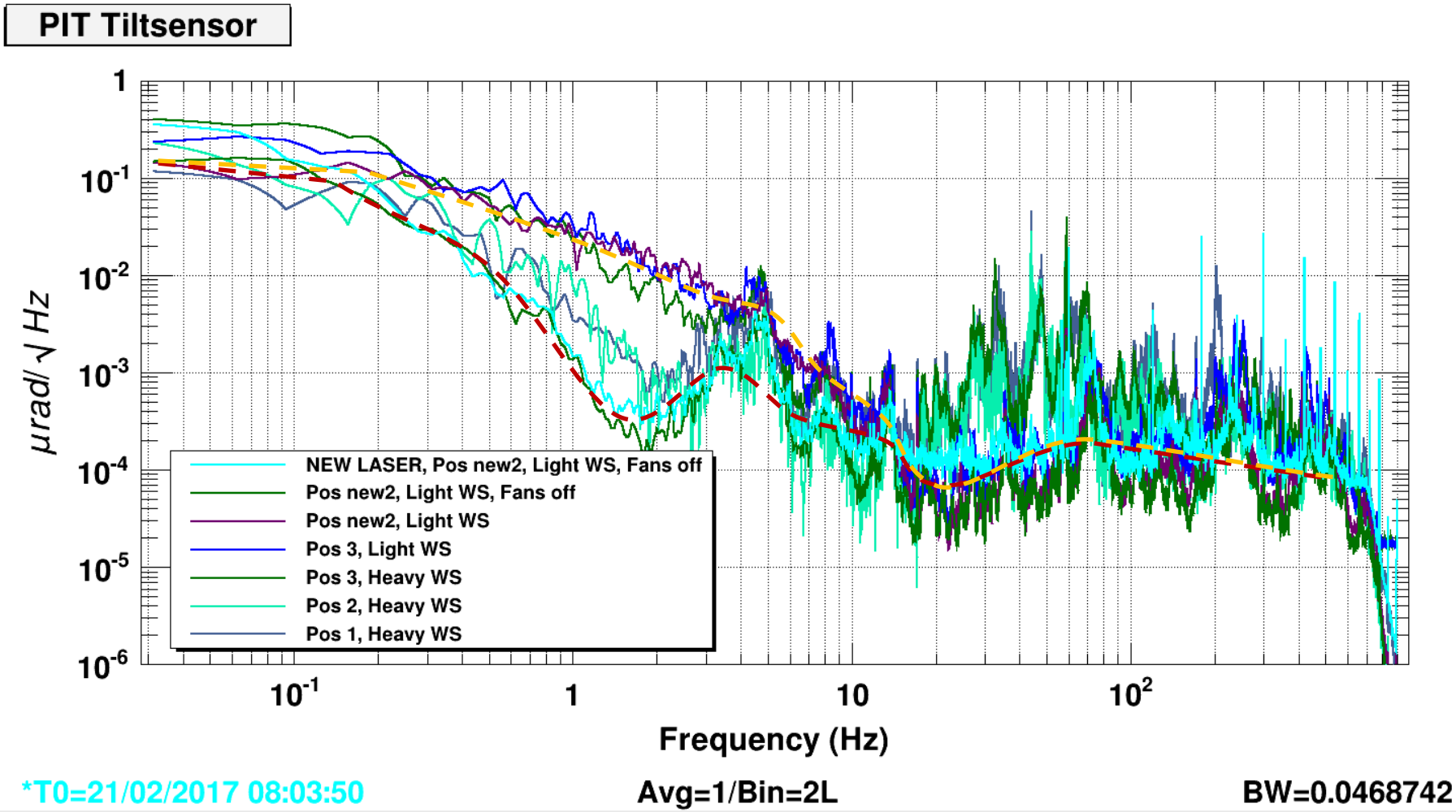

Tilt sensor and OPLEV spectra

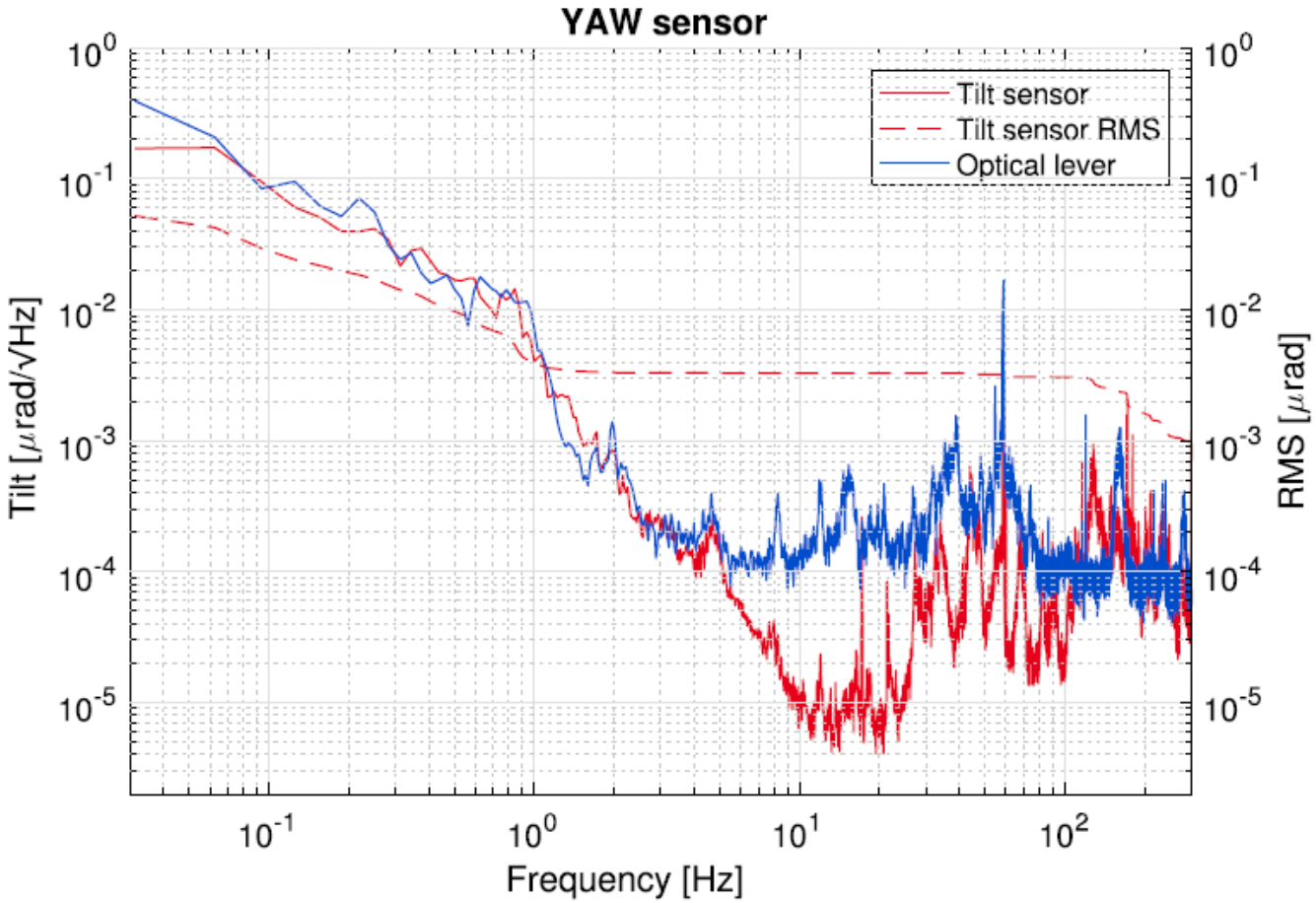

Tilt sensor and OPLEV spectra

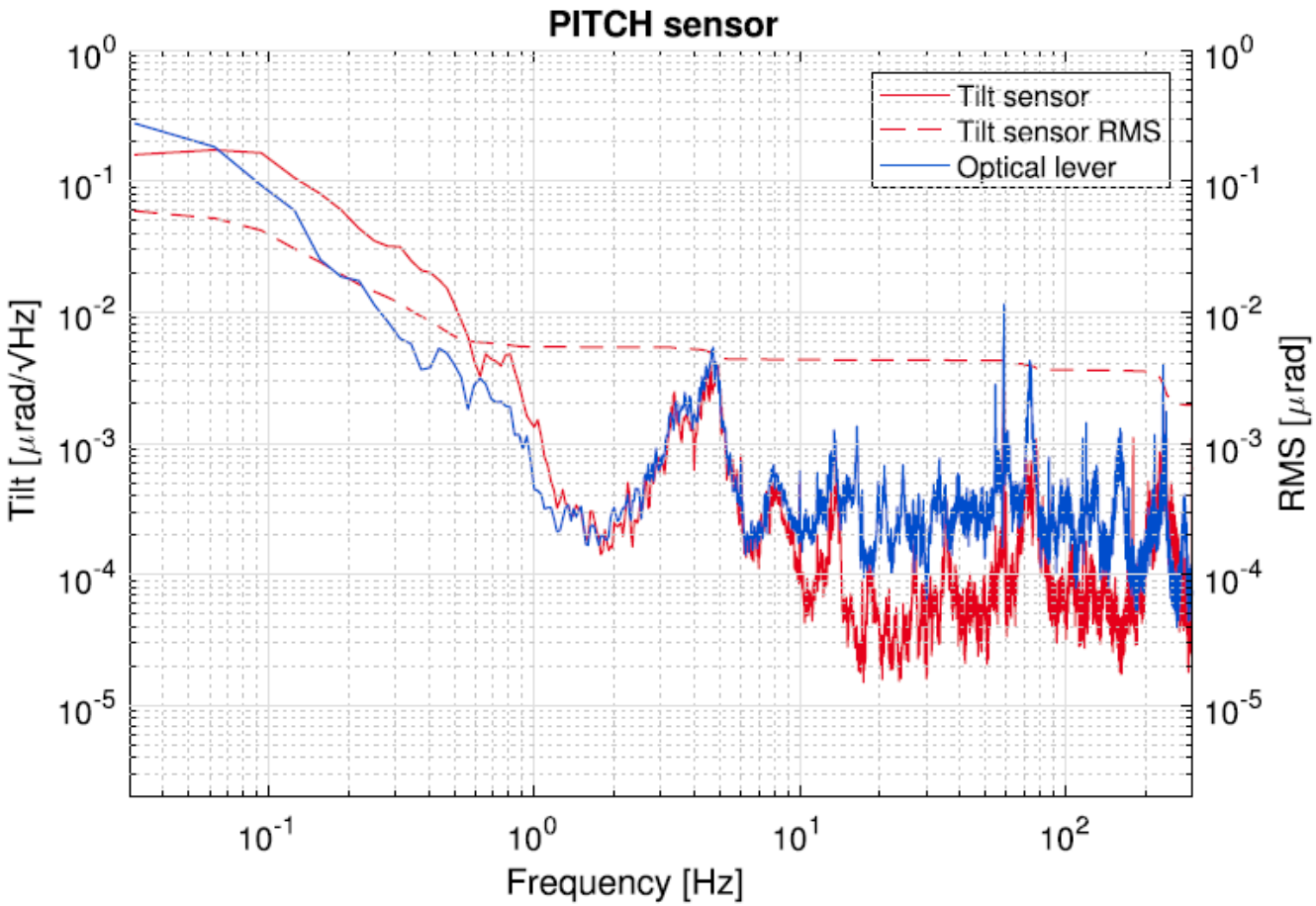

Electric noise analysis

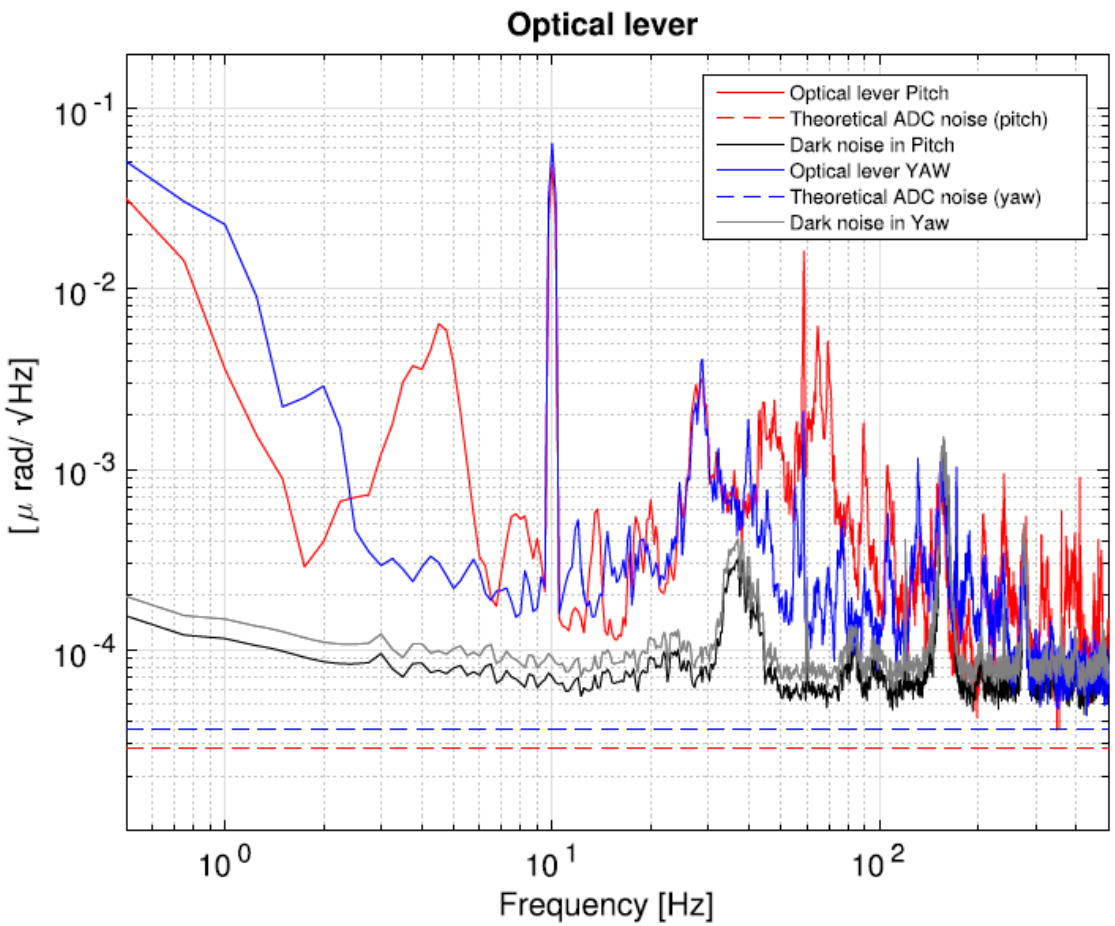

Summary

- We built two axes interferometer tilt sensor for initial mirror alignment
  - Can measure the changes in tilt angles without calibration process.
  - Almost immune to length coupling
  - High sensitivity : <10 prad/Hz$^{1/2}$ @ 10 Hz
  - Wide dynamic range : >3mrad @ 1m distance
- We installed the tilt sensor on the MCE and evaluated tilt sensor
  - The two axes tilt sensor have been installed and evaluated.
  - Optical lever is calibrated by using the tilt sensor.
  - Tilt sensor shows better sensitivity above 10 Hz
  - We found noise near the 4.5 Hz, and it was not coming from pylon.
  - The pylon has additional noise larger than 10^{-4} μrad at above 10Hz (PIT).
  - We found that a heavier wind shield generates larger noise for tilt measurements
  - We found that current noise limit of optical lever is not ADC noise but electric noise.
  - We published our demonstration result.

Tilt sensor using FMZI

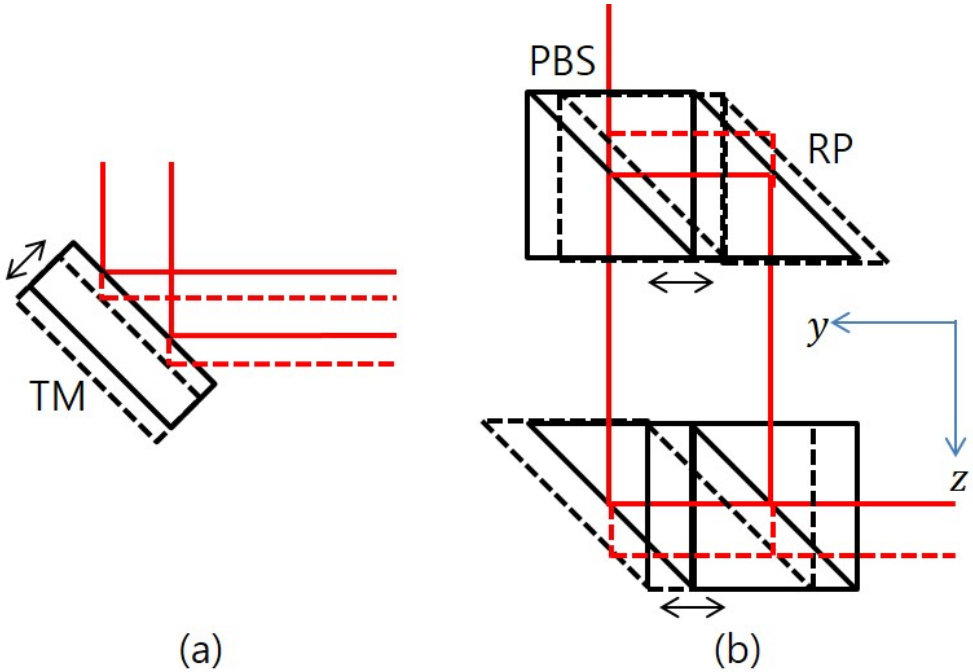

Insensitive to length coupling