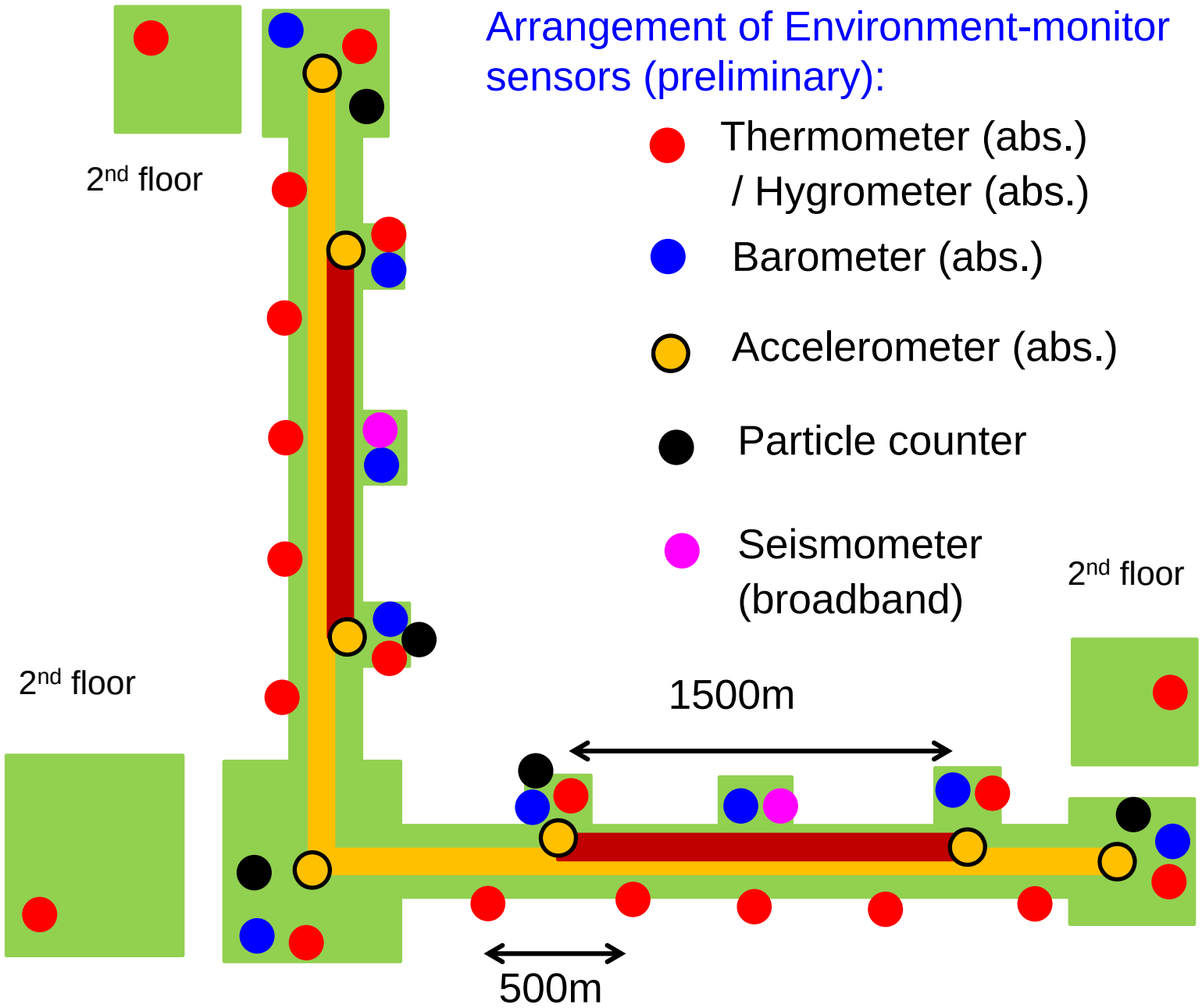
Arrangement of Environment-monitor sensors (preliminary):
Thermometer (abs.) / Hygrometer (abs.)
Barometer (abs.)
Accelerometer (abs.)
Particle counter
Seismometer (broadband)
2nd floor
2nd floor
2nd floor
1500m
500m

Environment-monitor sensors (preliminary):

End room

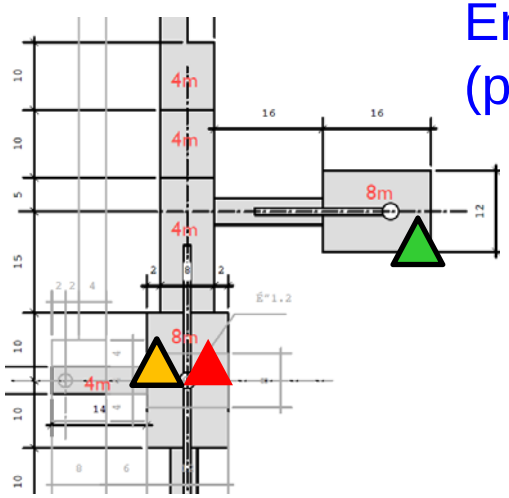

Thermometer (rel.)

Accelerometer (rel.)

Microphone, EM sensor

Center room

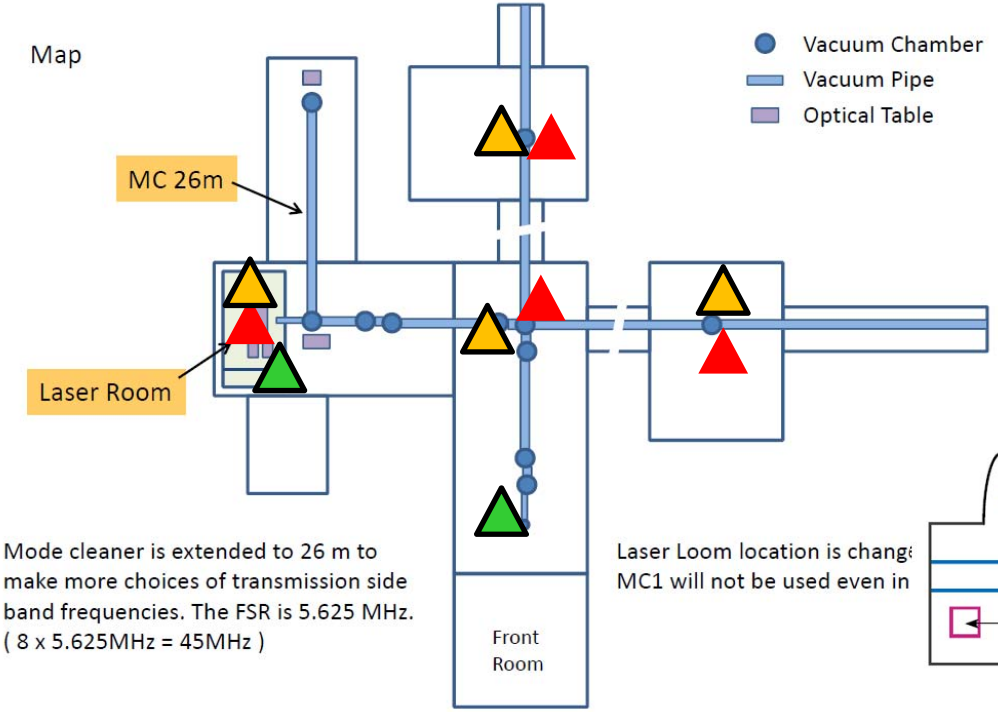

Geo area

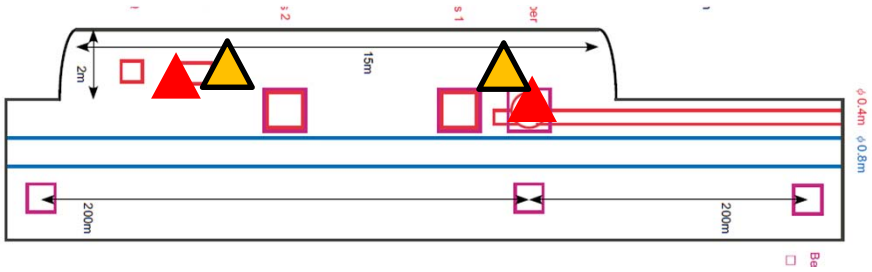

High end (absolute) Low end (relative, low resolution)

Thermometer δt~ 0.1deg

voltage

USB

δt~ 1deg

voltage

Barometer

δp~ 0.1hPa

voltage/RS232c

δp~ 1hPa

voltage

Accelerometer

ICD parameters

Symbol	Sensor	Rank	Range	Resolution	Response	Vendor
TH_A_1	Thermo	abs.	-50–50deg	0.15deg	DC-0.1Hz	Yokogawa
TH_A_1	+Hygro	abs.	0-100%	3%	DC-0.1Hz	Yokogawa
T_R_1	Thermo	rel.	-50-200deg	0.0001deg	DC-1Hz	Tokyo Dempa
T_R_2	Thermo	rel.	-55-150deg	0.5deg	DC-0.3Hz	Texas Instruments
B_A_1	Baro.	abs.	850-1050hPa	0.15hPa	DC-0.1Hz	Yokogawa
Acc_A_1	Accel.	abs.	20m/s^2	1.e-5m/s^2	DC-500Hz	Japan Aviation Electronics
Acc_R_1	Accel.	rel.	50m/s^2	1.e-2m/s^2	1-5kHz	Kistler
Sei_R_1	Velocity	rel.	1.3e-2m/s	3e-10m/s^2/rHz	8.3m-50Hz	Streckeisen
Sei_R_2	Velocity	rel.	1.5e-2m/s	1e-10m/s^2/rHz	4m-200Hz	Nanometrics
Sei_R_3	Velocity	rel.	1.3e-2m/s	3e-10m/s^2/rHz	3m-50Hz	Guralp
Mic_R_1	Acoustic	rel.	146dB	14.6dB	6.3-20kHz	Bruel and Kjaer
Mic_R_2	Acoustic	rel.	140dB	19dB	20-20kHz	Ono Sokki
Mag_R_1	Mag.	rel.	70-1000uT	6pT/rHz	DC-3kHz	Bartington
Mag_R_1	Mag.	rel.	50uT	0.1nT	DC-5Hz	Shimadzu
Par_A_1	Particle	abs.	0.2-5um	0.2um	NA	MetOne
Par_A_2	Particle	abs.	0.3-5um	5%	10s-2h	RION

Data acquisition system for EM (environmental monitor)

1st phase (before iKAGRA)

EM-DAQ (cRIO systems) acquires EM signals and stores the data on RAIDs through LAN. The system accepts voltage and serial (RS232c) signals. Typical configuration of a cRIO system includes A/Ds (24-bit 12.5kS/s) and a serial module. The modules may be changed upon request. The cRIO systems are planned to be arranged on 9-10 locations in the tunnel, including center/end rooms.

2nd phase (after iKAGRA in operation)

iKAGRA-DAQ acquires EM signals, which are divided from the sensors, in parallel with EM-DAQ.