Interferometer design of LCGT

Masaki Ando
Department of Physics, University of Tokyo
the LCGT collaboration

LCGT Design Review (July 06 , 2008, the University of Tokyo)

干渉計　再検討事項

Two nearby interferometers

As independent as possible
Center rooms: separated
3km vacuum tube: common

→ **Single interferometer**

New IFO layout

Main interferometer

Baseline Length : 3km
Broad band RSE
with power recycling
Arm cavity Finesse : 1550
Power Recycling Gain : 11
Signal band Gain : 15
Stored Power : 771kW
Signal band : 230Hz

→ **Baseline Length : 2.7km**

Parameter optimization
Observable range

Interferometer layout

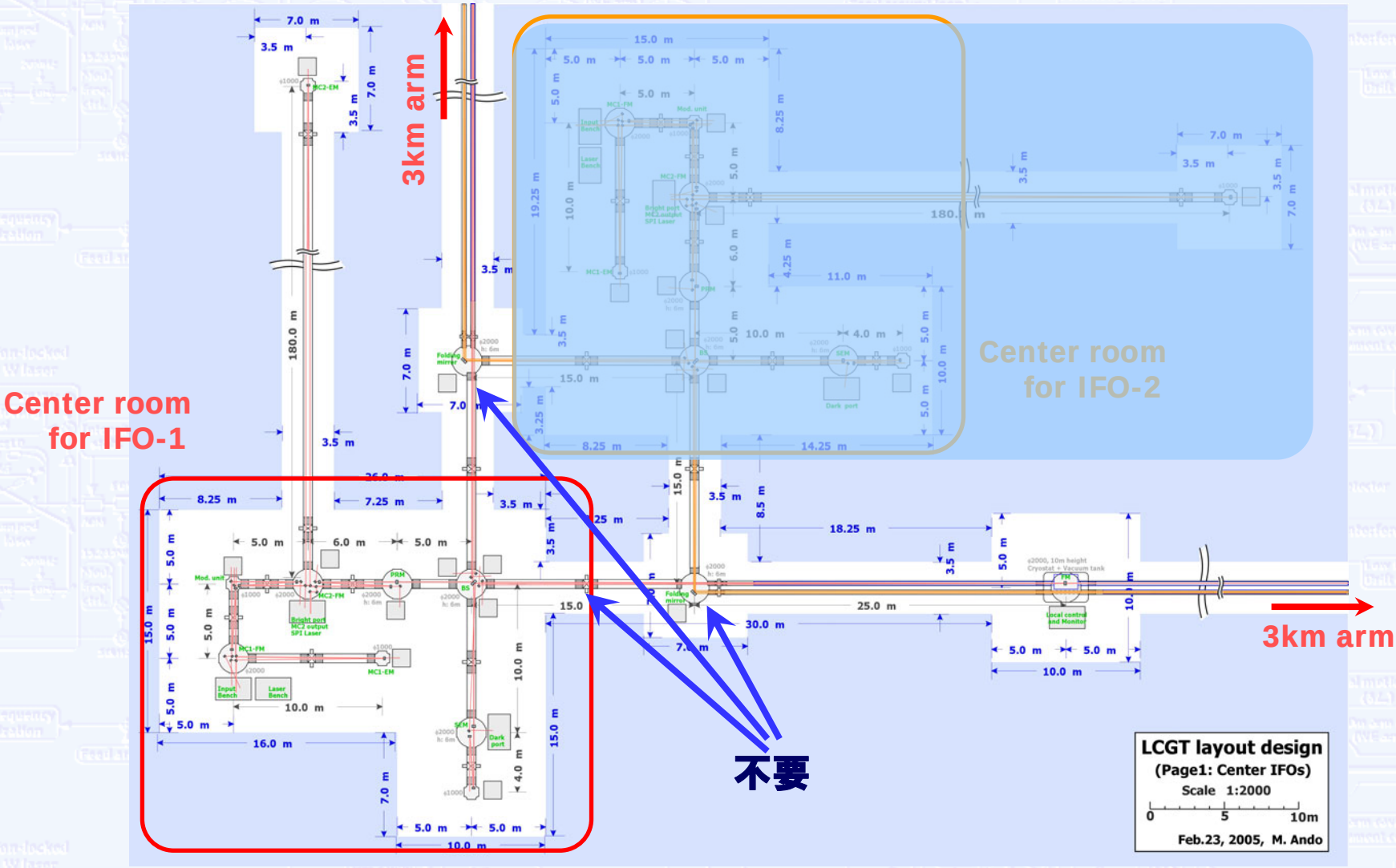

Optical readout noise

LCGT sensitivity : Mostly limited by quantum noises
(Radiation pressure noise and Shot noise)

Shot noise

- Phase fluctuation of light
- Proportional to $P^{-1/2}$

Radiation pressure noise

- Amplitude fluctuation of light
- Proportional to $P^{1/2}$

Noise level depends on

- Laser power in IFO
- Signal band of IFO

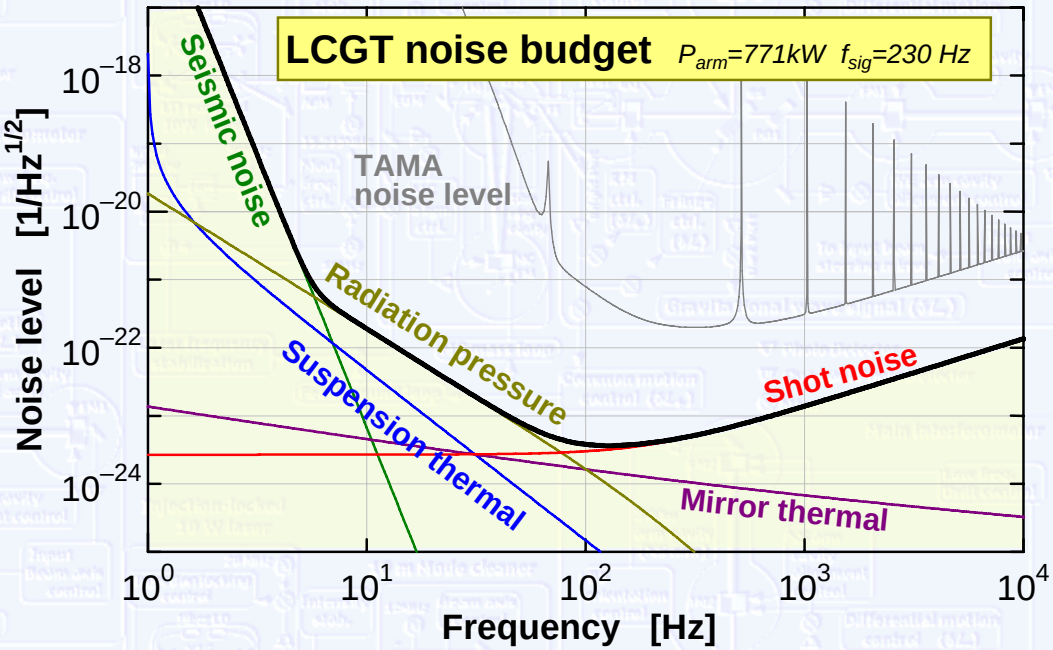

Design the interferometer optical parameters

Optical parameter selection

(Previous design)

Optimize for 1.4M_{solar} NS inspiral
Realistic parameters

Calculate observable range
as a function of
Light power in cavities
Signal bandwidth

Arm cavity Finesse : 1550
Power Recycling Gain : 11
Signal Band Gain : 15
Stored Power : 771kW
Signal band : 230Hz

Observable range : 185Mpc

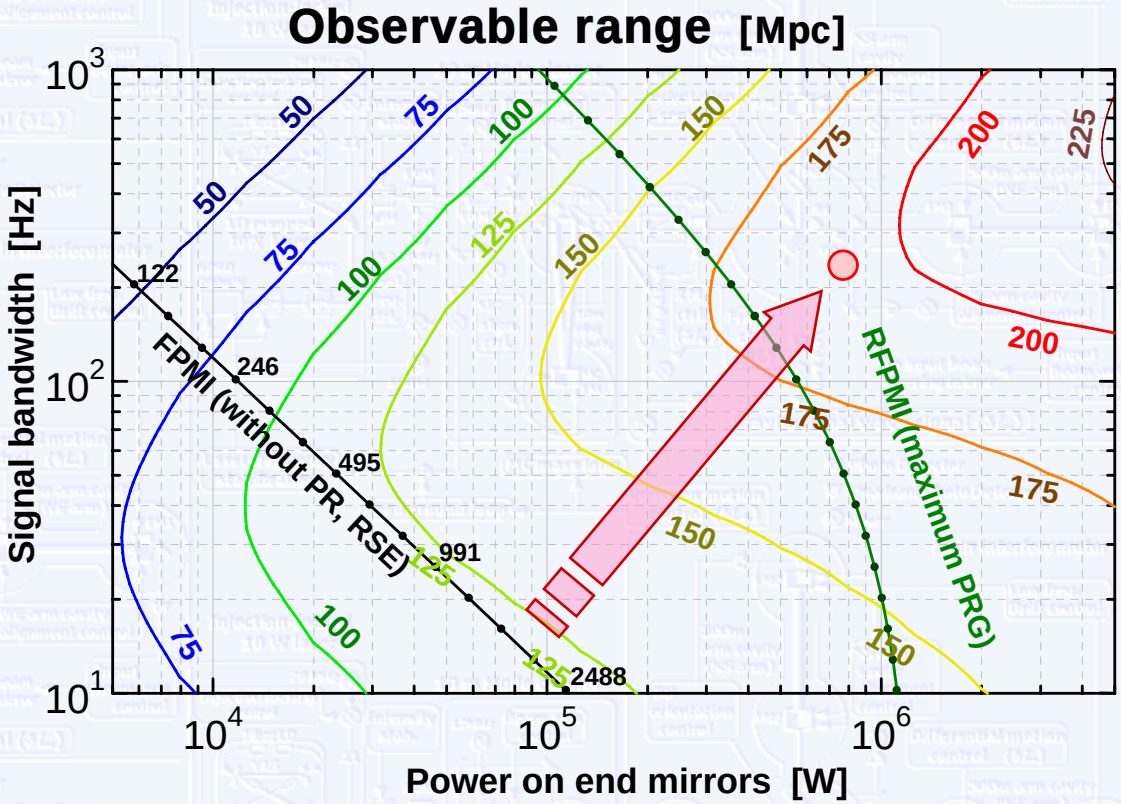

SNR = 10
Single interferometer
Optimal direction and polarization

Optical parameter selection

Baseline length → 2.7km

(New design)

Optimize for 1.4M_{solar} NS inspiral
Realistic parameters

Calculate observable range
as a function of
Light power in cavities
Signal bandwidth

Arm cavity Finesse : 1550
Power Recycling Gain : 11
Signal Band Gain : 11
Stored Power : 771kW
Signal band : 195Hz

Observable range : 167Mpc

(10% reduction,
→ event rate ~25% reduction)

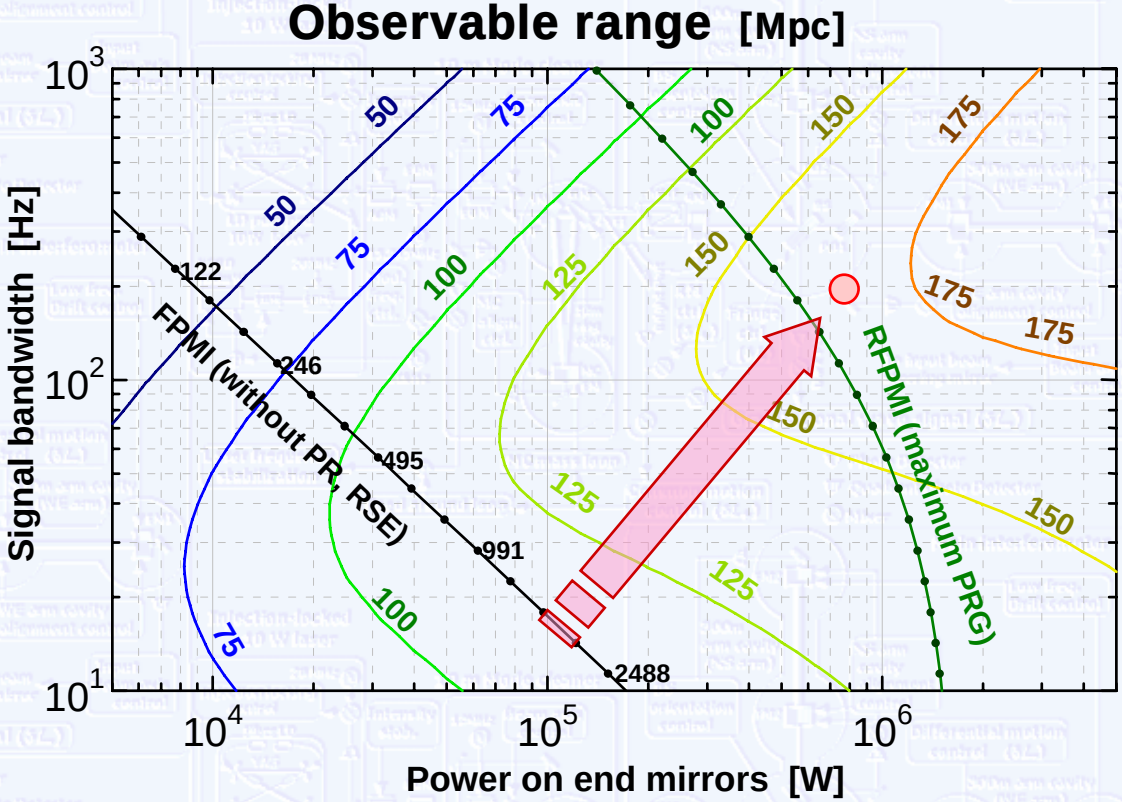

SNR = 10
Single interferometer
Optimal direction and polarization

Sensitivity Curve

Almost no difference at a glance

3.95 x10^{-24} Hz$^{-1/2}$ → 4.58x10^{-24} Hz$^{-1/2}$

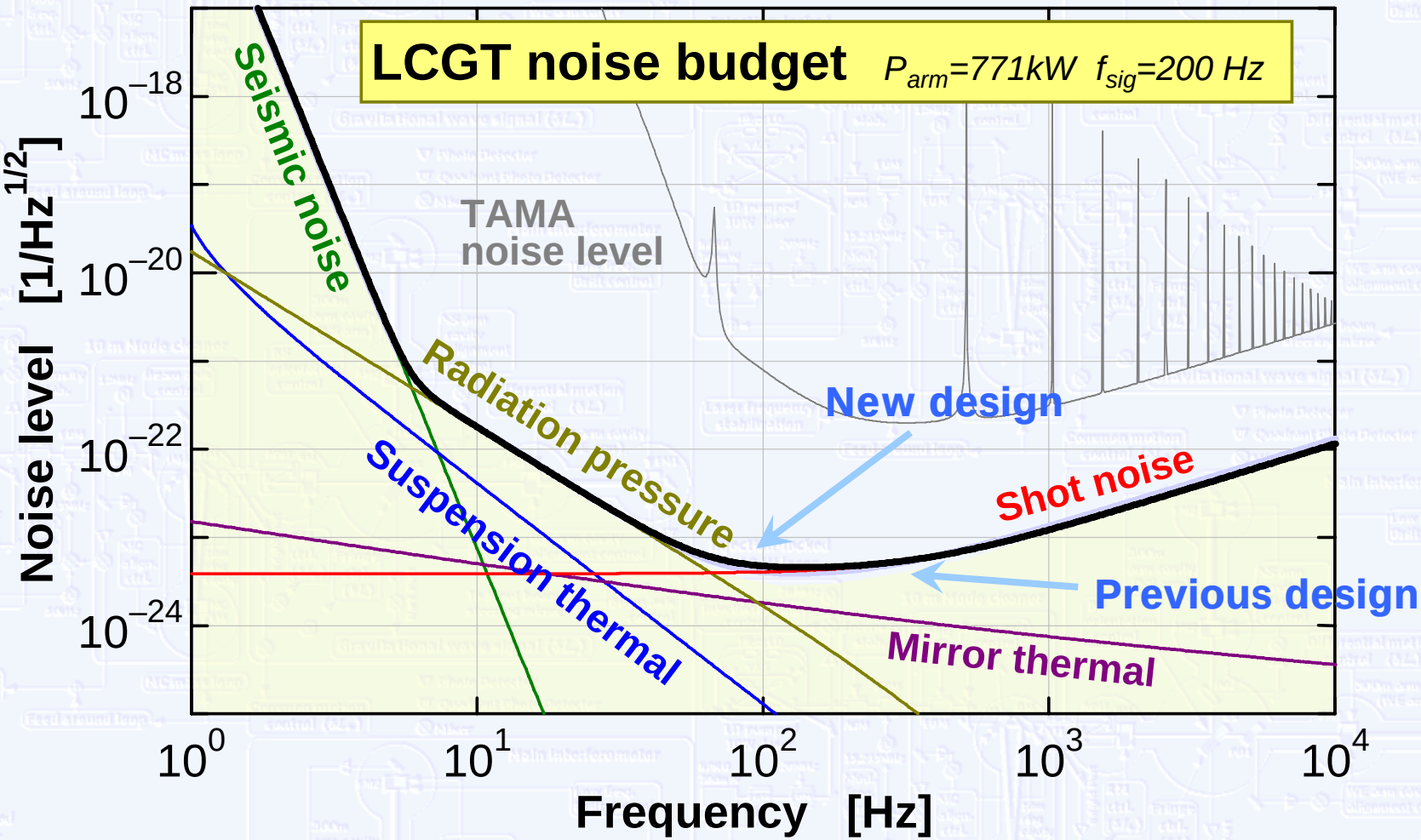

感度向上の可能性

ハイパワー化

レーザー光源 (出力 150W)
入出射光学系 (透過率 50％)
鏡の品質 (光損失 10ppm)
パワーリサイクリング (ゲイン 11)
→ パワー 2倍

→ 7％程度のレンジ向上
(ただし鏡冷却 →FM透過 3kWが限界
現状 0.39kW)

狭帯域化

Detuned RSE

→ 20％程度のレンジ向上
(70-80％程度のイベントレート向上)
が期待できる

スクイージング

ダークポートからの入射 ~10dB?

→ 70％程度のレンジ向上
(5倍程度のイベントレート向上)
が期待できる

鏡の大型化

現状: 直径 25cm, 厚さ 15cm, 30kg
→ 直径 30cm, 42kg

→ 13％程度のレンジ向上
(40％程度のイベントレート向上)
が期待できる

感度向上の可能性

	Obs. range [Mpc]	Range gain	Rate ratio
Original design Baseline 3km	185 (103)	10 %	1.33
Current design Baseline 2.7km	167 (93)	---	1
High Laser Power Power in arm x2	179 (100)	7 %	1.23
Narrow band Detuned RSE	200 (112)	20 %	1.72
Squeezing Shot noise -10dB	284 (159)	70 %	4.92
Heavy mirror 30kg → 42kg	190 (106)	13 %	1.47
Adv. LIGO	320 (180)	92 %	7.03
Adv. VIRGO	215 (120)	29 %	2.13

まとめ

基線長が 3km → 2.7kmに短縮されたことにより
観測レンジは 184Mpc → 167Mpc に低下する
イベント数は　約3 / 4になる

提言：　LCGT もしくは Ad. LCGT として、
感度向上の方策を持っているべき

End

Broadband - Narrowband

Detuned RSE configuration
→ SNR increase 23 %
Event rate increase 86 %

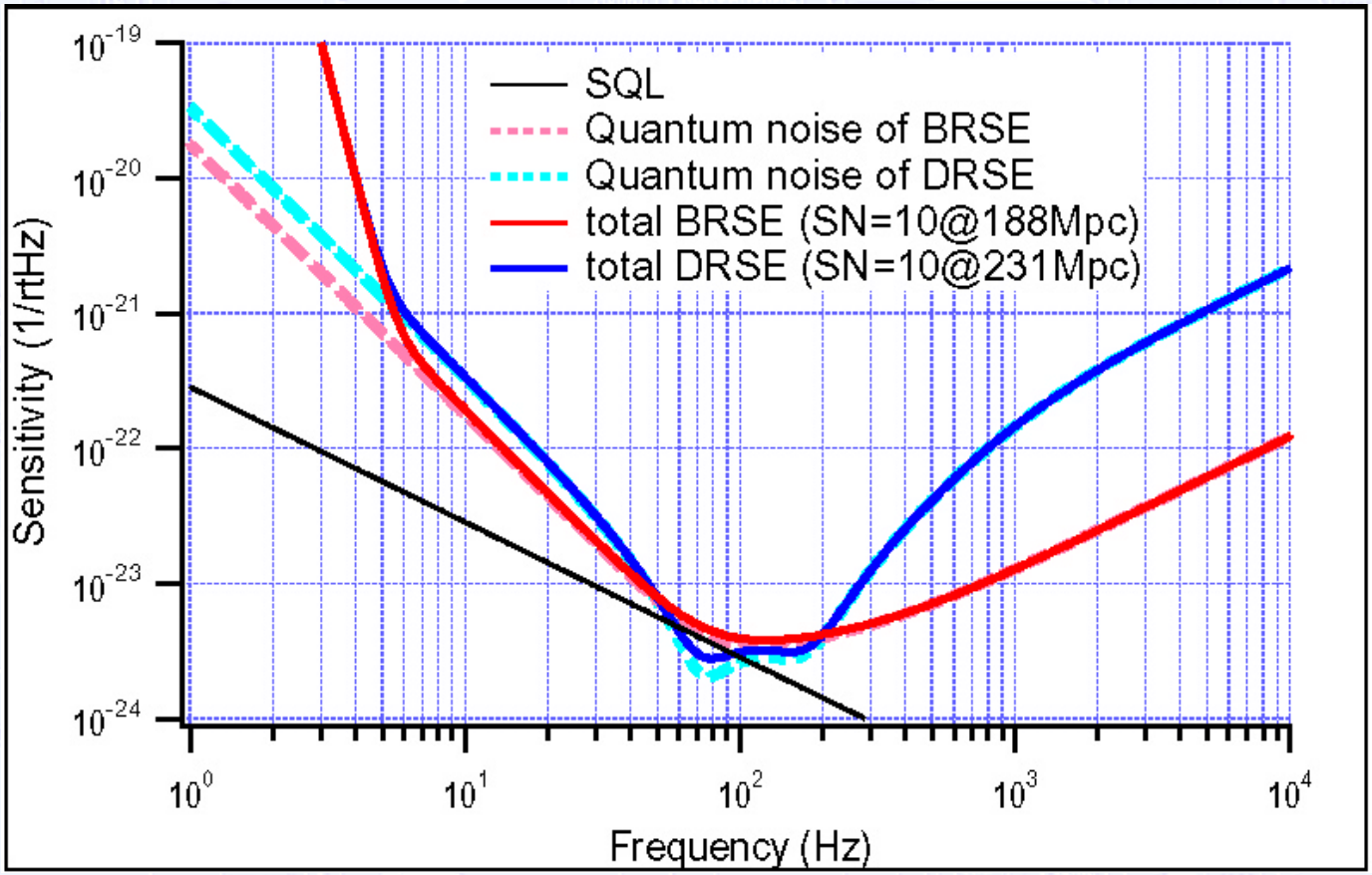

Comparison of detectors

- **Comparison of next generation GW detectors**

LCGT (JPN)		Advanced LIGO (USA)
2 detectors (3km) (2 nearby detectors)	Scale	3 detectors (4km) (2 nearby, 1 separated)
Long baseline Better seismic attenuation system Underground site	Seismic noise reduction	Long baseline Better seismic attenuation system Suburban site
Low-mechanical-loss mirrors and suspensions Cryogenic (20k)	Thermal noise reduction	Low-mechanical-loss mirrors and suspensions Flat-top beam
High-power laser source Low-loss optics Broad-band RSE config.	Quantum noise reduction	High-power laser source Low-loss optics Detuned RSE config.

LCGT optical configuration

Resonant-sideband extraction with power recycling

- High-finesse arm cavities
- PRM between BS and laser source
- SEM at the detection port

Finesse x 2/π
= Light bounce number in a FP cavity

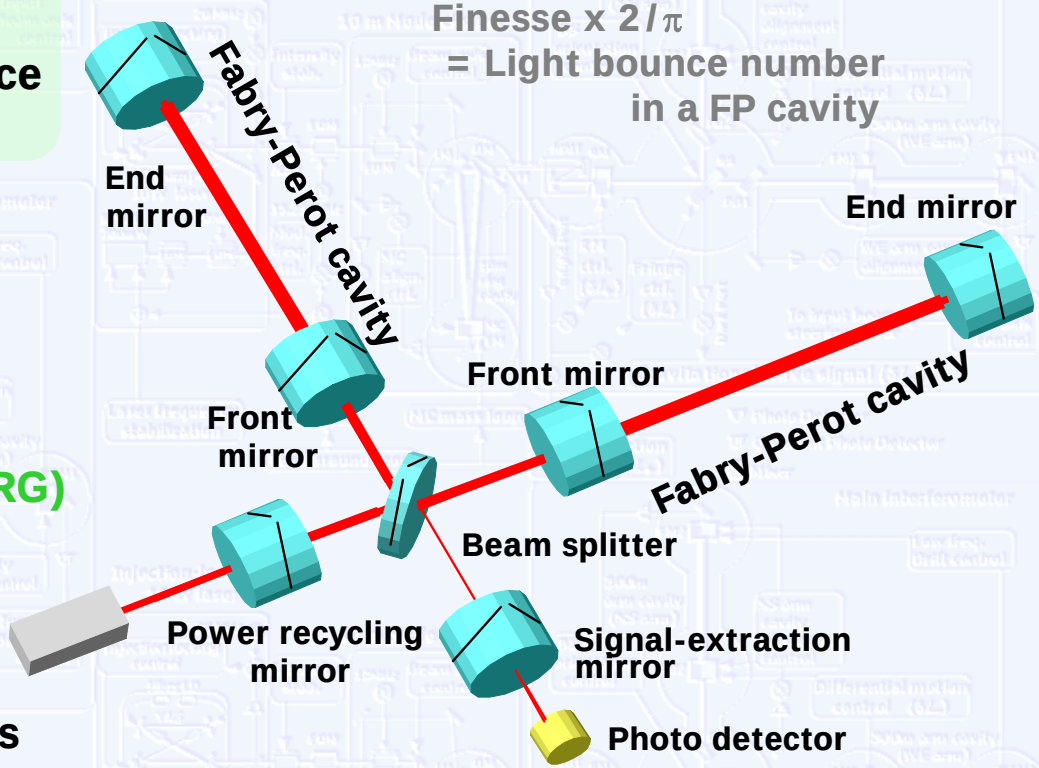

Power recycling
PRM+FM
→ Increase effective finesse
→ Increase power in cavities
by Power-recycling gain (PRG)

Resonant-sideband extraction
SEM+FM
→ Decrease effective finesse for signals
→ Increase signal band
by Signal-band gain (SBG)

Interferometer overview

(Previous design)

Two nearby interferometers

As independent as possible
Center rooms: separated
3km vacuum tube: common

Main interferometer

Broad band RSE
with power recycling
Arm cavity Finesse : 1550
Power Recycling Gain : 11
Signal band Gain : 15
Stored Power : 771kW
Signal band : 230Hz

Input optics

Two mode cleaners
Baseline lengths : 10m and 180m
Modulators for IFO control
Laser stabilization

Output optics

Output mode cleaner
Round trip length : 70mm
Multiple InGaAs photo diodes

Observation system

Monitor and organize
the whole detector system
Automatic lock-acquisition
Automatic interferometer adjustment
Monitor and diagnosis

LCGT interferometer

- **LCGT interferometer**

Main IFO : 3km IFO
Input optics : Two MCs, Modulators, MMT
Output optics: OMC, Photo detectors

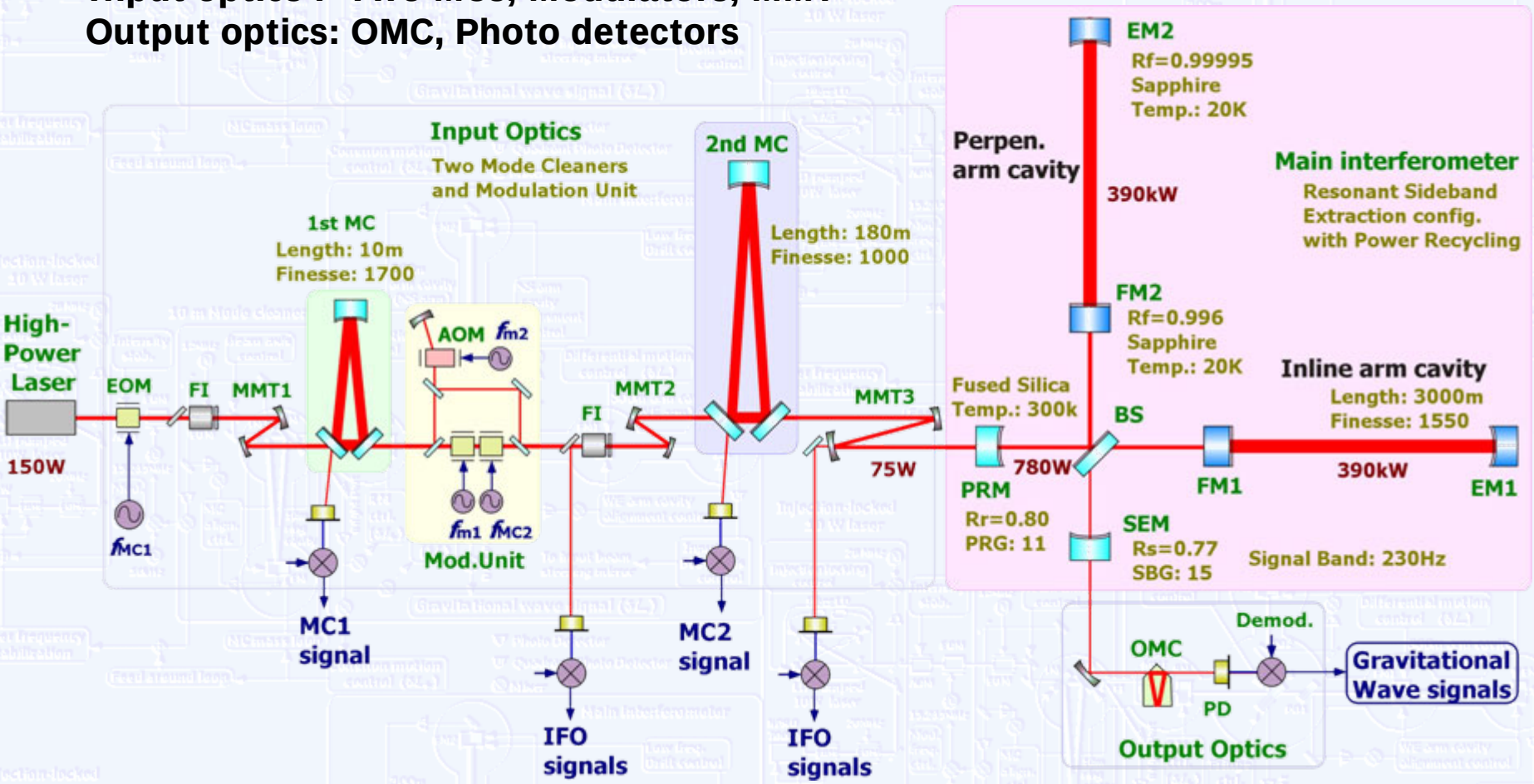

Main interferometer (2)

- **Interferometer optical configuration**

Ideally, possible to realize same power and signal BW with any config.

Power : cavity finesse, PRM

Signal BW : cavity finesse, SRM

Realistic constraint

- **Loss in optics and interference**
- **Simplicity of control system**
- **Thermal problem in optics**

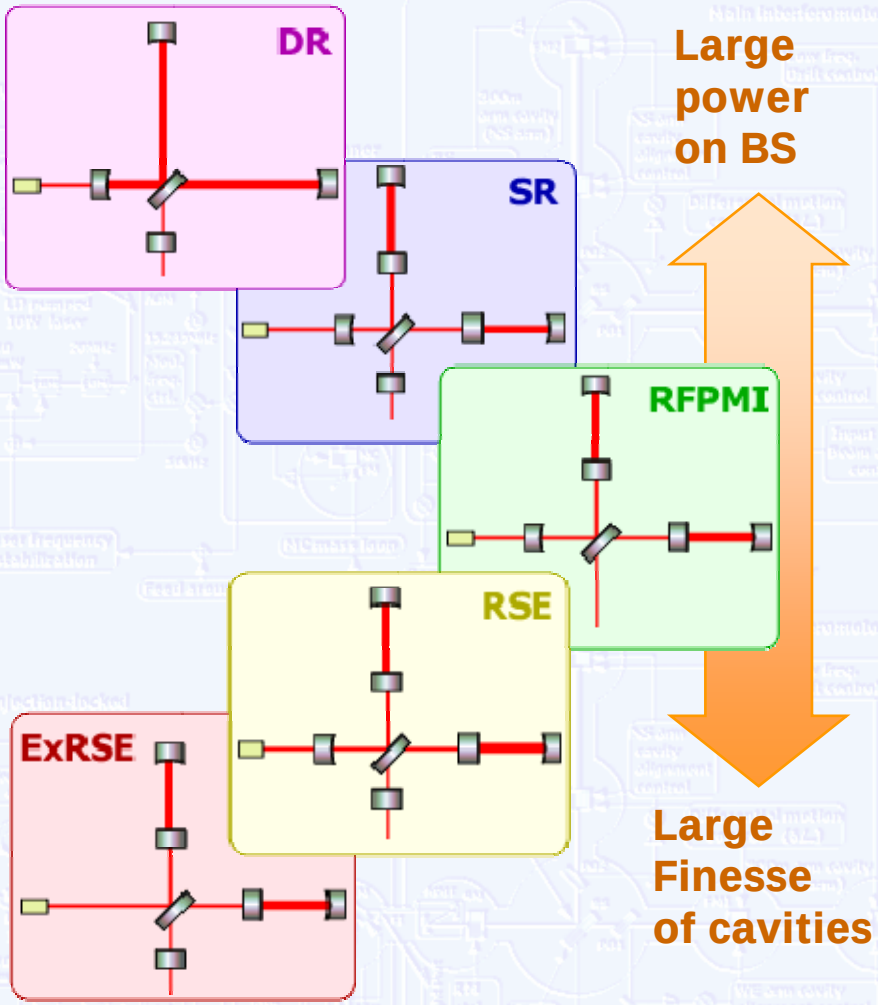

Main interferometer (4)

- **Merit of RSE**

High-finesse cavity and moderate PRG

Easier to realize high power in cavities

Smaller transmission light in optics ⇦ **Main reason for LCGT**

Flexible optimization for GW sources

Independent adjustment of
power in cavities and signal band

Narrow-band observation (optional)

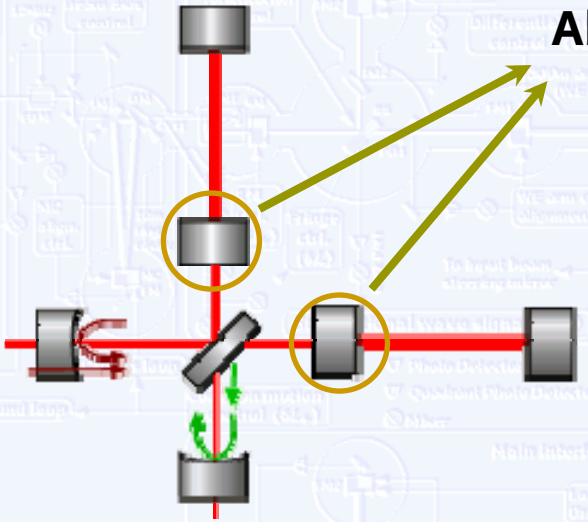

Absorption in sapphire substrates

Heat absorption :
20ppm/cm x 15 cm = 300 ppm

Cooling power : 1W for each mirror

⇩

Laser power on BS should be less than ~1kW (safety factor 3)

Main parameters

Detector parameters

Laser

Nd:YAG laser (1064nm)
Injection lock + MOPA

Power : 150 W

Main Interferometer

Broad band RSE configuration

Baseline length : 3km
Beam Radius : 3-5cm
Arm cavity Finesse : 1550
Power Recycling Gain : 11
Signal Band Gain : 15
Stored Power : 771kW
Signal band : 230Hz

Vacuum system

Beam duct diameter : 100cm
Pressure : 10^{-9} Torr

Mirror

Sapphire substrate
+ mirror coating

Diameter : 25cm
Thickness : 15cm
Mass : 30 kg
Absorption Loss : 20ppm/cm
Temperature : 20 K
Q = 10^8
Loss of coating : 10^{-4}

Final Suspension

Suspension + heat link
with 4 Sapphire fibers

Suspension length : 40cm
Fiber diameter : 1.5mm
Temperature : 16K
Q of final suspension : 10^8