The effect of mirror curvature error to IR range of LCGT

2011/2/9

E.Nishida

Ochanomizu.Uni

- Objective:
  1. Calculating the IR reduction when ROC have some error.
  2. In that case, optimizing IR by detuning PRC or SRC
- Method:
  - LCGT parameter code (created by Somiya_san)
  - by FINESSE

settings

- BRSE
- Unfolded and folded
- SRC
  - error (-2%, -1%, opt, 1%, 2%)
- ROC
  - Error (NorthEnd, NorthFront, EastEnd, EastFront): (+,+,-,-), (+,-,-,+), (+,+,+,+)
  - 0.5%, 1%, 2%
- Detune each end mirror phase differentially or PRC

Parameters

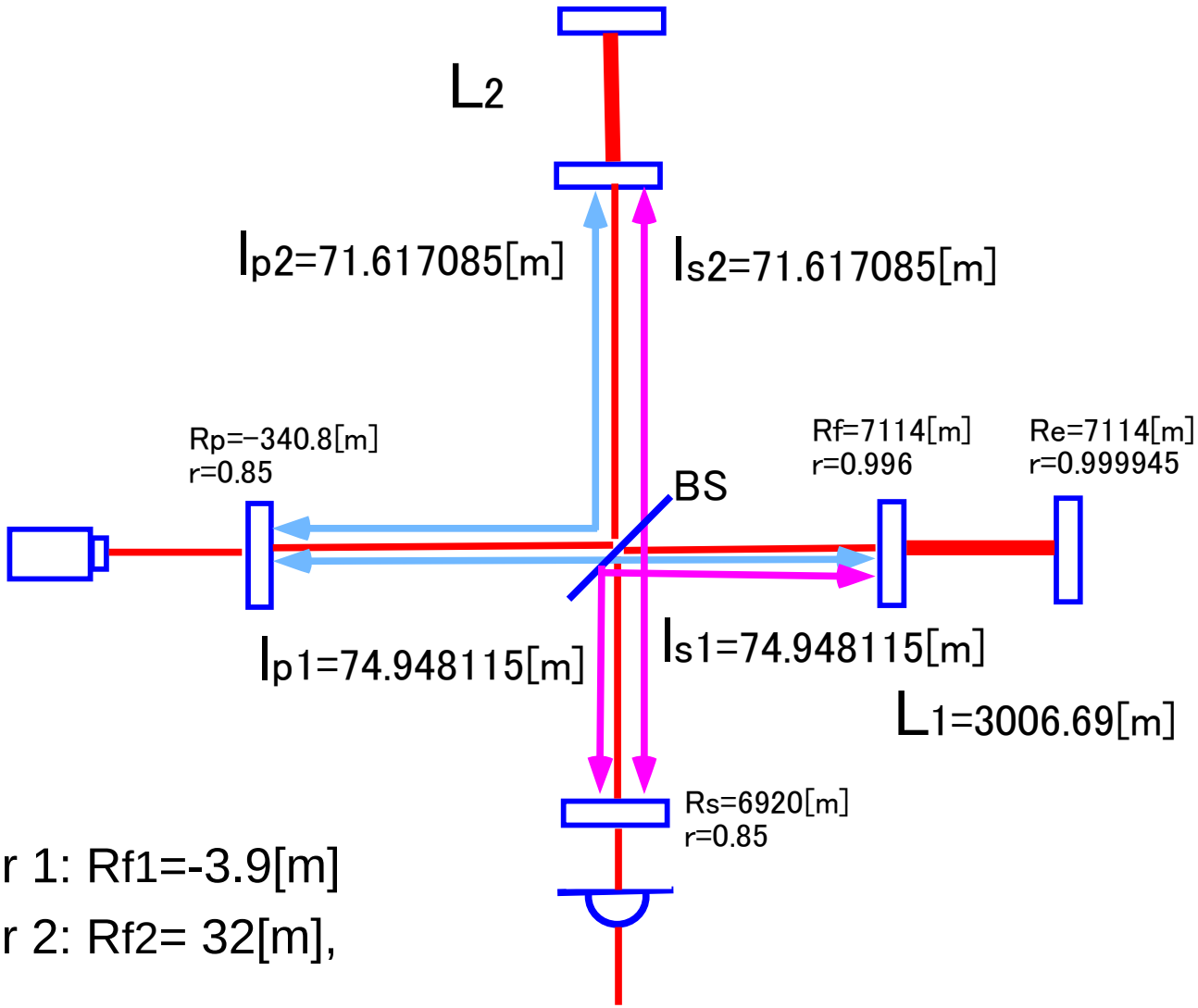

figure1: parameters

- Curvature
  - Folded mirror 1: Rf1=-3.9[m]
  - Folded mirror 2: Rf2= 32[m],

ROC error 0.5%

summary

unfolded SRC	detune [degree]	SRC error −2%	−1%	opt	1%	2%
(+, +, −, −) 腕detune	−0.0020	253.917	253.667	253.316	252.84	252.203
(+, −, −, +) 腕detune	0.0024	247.254	245.78	244.081	242.149	240.007
(+, +, +, +) PRCdetune	1.7	251.952	251.988	252.021	252.033	251.985

folded SRC	detune [degree]	−2%	−1%	opt	1%	2%
	−0.0021	256.135	256.143	256.147	256.154	256.159
	0.0023	258.086	258.074	258.066	258.055	258.043
	1.6	254.106	254.033	253.961	253.895	253.83

[Mpc]

ROC error 1%

summary

unfolded SRC	detune [degree]	SRC error −2%	−1%	opt	1%	2%
(+, +, −, −) 腕detune	−0.0037	240.915	239.465	237.772	235.834	233.682
(+, −, −, +) 腕detune	0.0051	217.264	213.079	208.613	203.967	199.285
(+, +, +, +) PRCdetune	3.5	240.976	240.941	240.93	240.93	240.91

folded SRC	detune [degree]	−2%	−1%	opt	1%	2%
	−0.0038	250.891	250.921	250.945	250.969	250.993
	0.0048	255.068	255.013	254.964	254.913	254.867
	3.5	243.97	243.863	243.761	243.664	243.569

[Mpc]

ROC error 2%

summary

unfolded SRC	detune [degree]	SRC error −2%	−1%	opt	1%	2%
(+, +, −, −) 腕detune	−0.0072	182.995	179.701	176.137	172.378	168.548
(+, −, −, +) 腕detune	0.010	124.985	121.036	117.063	113.163	109.456
(+, +, +, +) PRCdetune	6.2	226.795	226.642	226.534	226.451	226.389

folded SRC	detune [degree]	−2%	−1%	opt	1%	2%
	−0.0074	209.958	210.04	210.116	210.186	210.255
	0.010	177.754	177.577	177.41	177.254	177.101
	6.1	230.46	230.343	230.227	230.115	230.01

[Mpc]

Sample:
SRCerror opt
ROCerror 2% (+, -, -, +)

X axis; end mirror detune phase [degree]

Y axis; PRC detune phase [degree]

Z axis; IR range [Mpc]

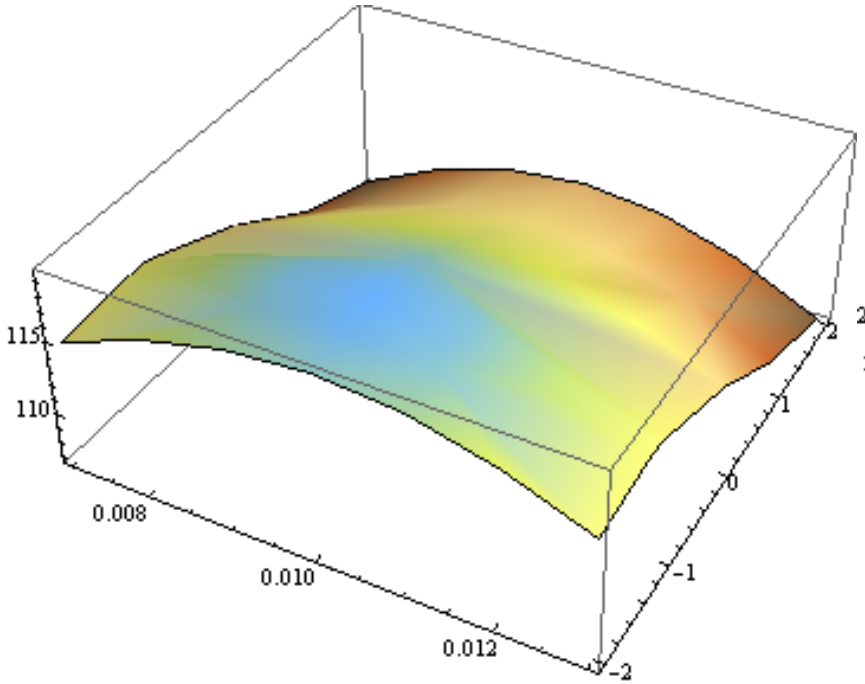

unfolded

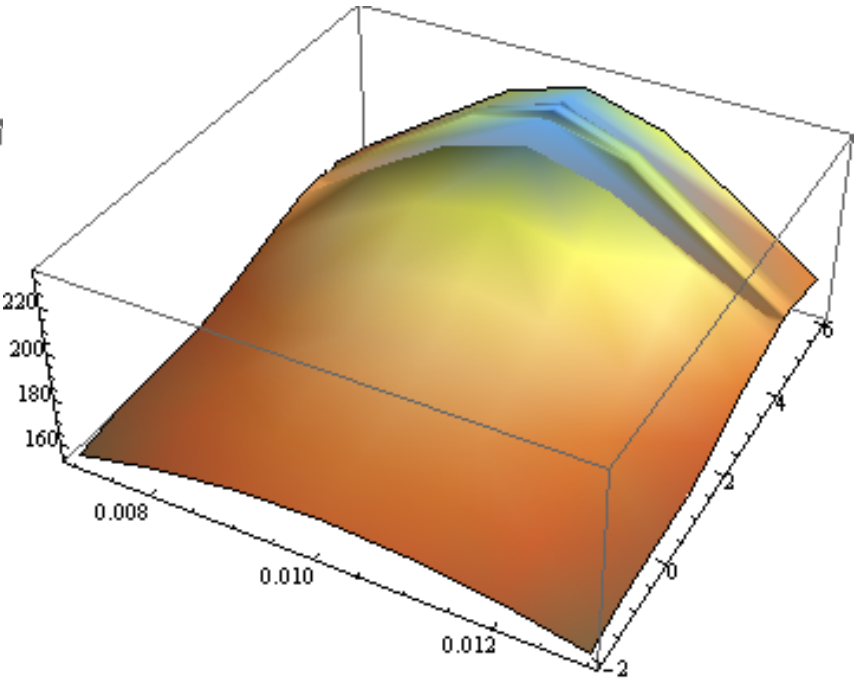

Folded